SCHEME OF TEACHING AND EXAMINATION
B.E Electronics & Communication Engineering / Telecommunication Engineering
(Common to Electronics & Communication and Telecommunication Engineering)

III SEMESTER

Sl. No	Subject Code	Title	Teaching Hours /Week		Examination				Credits
			Theory	Practical/ Drawing	Duration	Theory/ Practical Marks	I.A. Marks	Total Marks	
1	15MAT31	Engineering Mathematics –III*	04		03	80	20	100	4
2	15EC32	Analog Electronics	04		03	80	20	100	4
3	15EC33	Digital Electronics	04		03	80	20	100	4
4	15EC34	Network Analysis	04		03	80	20	100	4
5	15EC35	Electronic Instrumentation	04		03	80	20	100	4
6	15EC36	Engineering Electromagnetics	04		03	80	20	100	4
7	15ECL37	Analog Electronics Lab		1I+2P	03	80	20	100	2
8	15ECL38	Digital Electronics Lab		1I+2P	03	80	20	100	2
TOTAL			**24**	**6**	**24**	**640**	**160**	**800**	**28**

*Additional course for Lateral entry students only:

1	15MATDIP31	Additional Mathematics - I	03		03	80	--	80	--

SCHEME OF TEACHING AND EXAMINATION
B.E Electronics & Communication Engineering / Telecommunication Engineering
(Common to Electronics & Communication and Telecommunication Engineering)

IV SEMESTER

Sl. No	Subject Code	Title	Teaching Hours /Week		Examination				Credits
			Theory	Practical / Drawing	Duration	Theory/ Practical Marks	I.A. Marks	Total Marks	
1	15MAT41	Engineering Mathematics –IV*	04		03	80	20	100	4
2	15EC42	Microprocessor	04		03	80	20	100	4
3	15EC43	Control Systems	04		03	80	20	100	4
4	15EC44	Signals and Systems	04		03	80	20	100	4
5	15EC45	Principles of Communication Systems	04		03	80	20	100	4
6	15EC46	Linear Integrated Circuits	04		03	80	20	100	4
7	15ECL47	Microprocessor Lab		1I+2P	03	80	20	100	2
8	15ECL48	Linear ICs and Communication Lab		1I+2P	03	80	20	100	2
TOTAL			**24**	**06**	**24**	**640**	**160**	**800**	**28**

*Additional course for Lateral entry students only:

1	15MATDIP41	Additional Mathematics - II	03		03	80	--	80	--

SCHEME OF TEACHING AND EXAMINATION
B.E.: Electronics & Communication Engineering

V SEMESTER

Sl. No	Subject Code	Title	Teaching Hours /Week		Examination				Credits
			Theory	Practical /Drawing	Duration	Theory/ Practical Marks	I.A. Marks	Total Marks	
1	15ES51	Management and Entrepreneurship Development	04		03	80	20	100	4
2	15EC52	Digital Signal Processing	04		03	80	20	100	4
3	15EC53	Verilog HDL	04		03	80	20	100	4
4	15EC54	Information Theory & Coding	04		03	80	20	100	4
5	15EC55X	Professional Elective-1	03		03	80	20	100	3
6	15EC56X	Open Elective-1	03		03	80	20	100	3
7	15ECL57	DSP Lab		1I+2P	03	80	20	100	2
8	15ECL58	HDL Lab		1I+2P	03	80	20	100	2
TOTAL			**22**	**06**	**24**	**640**	**160**	**800**	**26**

Professional Elective-1			**Open Elective – 1* (List offered by EC/TC Board only)**	
15EC551	Nanoelectronics		15EC561	Automotive Electronics
15EC552	Switching & Finite Automata Theory		15EC562	Object Oriented Programming Using C++
15EC553	Operating System		15EC563	8051 Microcontroller
15EC554	Electrical Engineering Materials			
15EC555	MSP430 Microcontroller			

1. **Professional Elective:** Elective relevant to chosen specialization/ branch.
2. *** Open Elective List**: For other Open Electives offered by other Boards, refer the Scheme of other Boards or Consolidated list in VTU Website.

SCHEME OF TEACHING AND EXAMINATION
B.E.: Electronics & Communication Engineering

VI SEMESTER

Sl. No	Subject Code	Title	Teaching Hours /Week		Examination				Credits
			Theory	Practical/ Drawing	Duration	Theory/ Practical Marks	I.A. Marks	Total Marks	
1	15EC61	Digital Communication	04		03	80	20	100	4
2	15EC62	ARM Microcontroller & Embedded Systems	04		03	80	20	100	4
3	15EC63	VLSI Design	04		03	80	20	100	4
4	15EC64	Computer Communication Networks	04		03	80	20	100	4
5	15EC65X	Professional Elective-2	03		03	80	20	100	3
6	15EC66X	Open Elective-2	03		03	80	20	100	3
7	15ECL67	Embedded Controller Lab		1I+2P	03	80	20	100	2
8	15ECL68	Computer Networks Lab		1I+2P	03	80	20	100	2
TOTAL			**22**	**6**	**24**	**640**	**160**	**800**	**26**

Professional Elective-2			**Open Elective – 2* (List offered by EC/TC Board only)**	
15EC651	Cellular Mobile Communication		15EC661	Data Structures Using C++
15EC652	Adaptive Signal Processing		15EC662	Power Electronics
15EC653	Artificial Neural Networks		15EC663	Digital System Design using Verilog
15EC654	Digital Switching Systems			
15EC655	Microelectronics			

1. **Professional Elective:** Elective relevant to chosen specialization/branch.
2. *** Open Elective List**: For other Open Electives offered by other Boards, refer the Scheme of other Boards or Consolidated list in VTU Website.

SCHEME OF TEACHING AND EXAMINATION
B.E.: Electronics & Communication Engineering

VII SEMESTER

Sl. No	Subject Code	Title	Teaching Hours /Week		Examination				15EC
			Theory	Practical/Drawing	Duration	I.A. Marks	Theory/ Practical Marks	Total Marks	
1	15EC71	Microwave and Antennas	04		03	20	80	100	4
2	15EC72	Digital Image Processing	04		03	20	80	100	4
3	15EC73	Power Electronics	04		03	20	80	100	4
4	15XX74X	Professional Elective-3	03		03	20	80	100	3
5	15EC75X	Professional Elective-4	03		03	20	80	100	3
6	15ECL76	Advanced Communication Lab		1I+2P	03	20	80	100	2
7	15ECL77	VLSI Lab		1I+2P	03	20	80	100	2
8	15ECP78	Project Work Phase–I + Project work Seminar		03		100	-	100	2
TOTAL			**18**	**09**	**21**	**240**	**560**	**800**	**24**

Professional Elective-3		**Professional Elective-4**	
15EC741	Multimedia Communication	15EC751	DSP Algorithms and Architecture
15EC742	Biomedical Signal Processing	15EC752	IoT and Wireless Sensor Networks
15EC743	Real Time Systems	15EC753	Pattern Recognition
15EC744	Cryptography	15EC754	Advanced Computer Architecture
15EC745	CAD for VLSI	15EC755	Satellite Communication

1. Project Phase –I + Project Work Seminar: Literature Survey, Problem Identification, Objectives and Methodology. Submission of Synopsis and Seminar.

SCHEME OF TEACHING AND EXAMINATION
B.E.: Electronics & Communication Engineering

VIII SEMESTER

Sl. No	Subject Code	Title	Teaching Hours /Week		Examination				Credits
			Theory	Practical/ Drawing	Duration	I.A. Marks	Theory/ Practical Marks	Total Marks	
1	15EC81	Wireless Cellular and LTE 4G Broadband	4	-	3	20	80	100	4
2	15EC82	Fiber Optics & Networks	4	-	3	20	80	100	4
3	15EC83X	Professional Elective-5	3	-	3	20	80	100	3
4	15EC84	Internship/Professional Practice	Industry Oriented		3	50	50	100	2
5	15ECP85	Project Work	-	6	3	100	100	200	6
6	15ECS86	Seminar	-	4	-	100	-	100	1
TOTAL			**11**	**10**	**15**	**310**	**390**	**700**	**20**

Professional Elective -5	
15EC831	Micro Electro Mechanical Systems
15EC832	Speech Processing
15EC833	Radar Engineering
15EC834	Machine learning
15EC835	Network and Cyber Security

1. Internship / Professional Practice: To be carried between the (6th and 7th Semester) or (7th and 8th) Semester Vacation period.

B.E., III Semester, Electronics & Communication Engineering /Telecommunication Engineering

ENGINEERING MATHEMATICS-III

B.E., III Semester, Common to all Branches

[As per Choice Based Credit System (CBCS) scheme]

Subject Code	15MAT31	IA Marks	20
Number of Lecture Hours/Week	04	Exam marks	80
Total Number of Lecture Hours	50 (10 Hours per Module)		

Credits – 04

Course Objectives: This course will enable students to:

- Introduce most commonly used analytical and numerical methods in the different engineering fields.
- Learn Fourier series, Fourier transforms and Z-transforms, statistical methods, numerical methods.
- Solve algebraic and transcendental equations, vector integration and calculus of variations.

Modules	**RBT Level**
Module-1	
Fourier Series: Periodic functions, Dirichlet's condition, Fourier Series of periodic functions with period 2π and with arbitrary period $2c$. Fourier series of even and odd functions. Half range Fourier Series, practical harmonic analysis-Illustrative examples from engineering field.	L1, L2, L4
Module-2	
Fourier Transforms: Infinite Fourier transforms, Fourier sine and cosine transforms. Inverse Fourier transform. **Z-transform:** Difference equations, basic definition, z-transform-definition, Standard z-transforms, Damping rule, Shifting rule, Initial value and final value theorems (without proof) and problems, Inverse z-transform. Applications of z-transforms to solve difference equations.	L2, L3, L4
Module-3	
Statistical Methods: Review of measures of central tendency and dispersion. Correlation-Karl Pearson's coefficient of correlation-problems. Regression analysis- lines of regression (without proof) –Problems **Curve Fitting:** Curve fitting by the method of least squares- fitting of the curves of the form, $y = ax + b$, $y = ax^2 + bx + c$ and $y = ae^{bx}$. **Numerical Methods:** Numerical solution of algebraic and transcendental equations by Regula- Falsi Method and Newton-Raphson method.	L3
Module-4	
Finite differences: Forward and backward differences, Newton's forward and backward interpolation formulae. Divided differences- Newton's divided difference formula. Lagrange's interpolation formula and inverse interpolation formula (all formulae without proof)-Problems. **Numerical integration:** Simpson's $(1/3)^{th}$ and $(3/8)^{th}$ rules, Weddle's rule (without proof)–Problems.	L3

Module-5	
Vector integration: Line integrals-definition and problems, surface and volume integrals-definition, Green's theorem in a plane, Stokes and Gauss-divergence theorem(without proof) and problems. **Calculus of Variations:** Variation of function and Functional, variational problems. Euler's equation, Geodesics, hanging chain, Problems.	L3, L4 L2, L4
Course outcomes: On completion of this course, students are able to: • Know the use of periodic signals and Fourier series to analyze circuits and system communications. • Explain the general linear system theory for continuous-time signals and digital signal processing using the Fourier Transform and z-transform. • Employ appropriate numerical methods to solve algebraic and transcendental equations. • Apply Green's Theorem, Divergence Theorem and Stokes' theorem in various applications in the field of electro-magnetic and gravitational fields and fluid flow problems. • Determine the extremals of functionals and solve the simple problems of the calculus of variations.	

Question paper pattern:

- The question paper will have ten questions.
- Each full Question consisting of 16 marks
- There will be 2 full questions (with a maximum of four sub questions) from each module.
- Each full question will have sub questions covering all the topics under a module.
- The students will have to answer 5 full questions, selecting one full question from each module.

Text Books:

1. *B.S. Grewal: Higher Engineering Mathematics, Khanna Publishers, 43rd Ed., 2015.*
2. *E. Kreyszig: Advanced Engineering Mathematics, John Wiley & Sons,10th Ed., 2015.*

Reference Books:

1. *N.P.Bali and Manish Goyal: A Text Book of Engineering Mathematics, Laxmi Publishers, 7th Ed., 2010.*
2. *B.V.Ramana: "Higher Engineering Mathematics" Tata McGraw-Hill, 2006.*
3. *H. K. Dass and Er. Rajnish Verma: "Higher Engineering Mathematics", S. Chand publishing, 1st edition, 2011.*

Web Link and Video Lectures:

1. *http://nptel.ac.in/courses.php?disciplineID=111*
2. *http://www.khanacademy.org/*
3. *http://www.class-central.com/subject/math*

ADDITIONAL MATHEMATICS - I

B.E., III Semester, Common to all Branches

(A Bridge course for Lateral Entry students of III Sem. B. E.)

[As per Choice Based Credit System (CBCS) scheme]

Subject Code	15MATDIP31	IA Marks	--
Number of Lecture Hours/Week	03	Exam marks	80
Total Number of Lecture Hours	40 (08 Hours per Module)		

Credits – 00

Course Objectives: This course will enable students to:

- Acquire basic concepts of complex trigonometry, vector algebra, differential & integral calculus and vector differentiation.
- Solve first order differential equations.

Modules	**RBT Level**
Module-1	
Complex Trigonometry: Complex Numbers: Definitions & properties. Modulus and amplitude of a complex number, Argand's diagram, De-Moivre's theorem (without proof). **Vector Algebra**: Scalar and vectors. Vectors addition and subtraction. Multiplication of vectors (Dot and Cross products). Scalar and vector triple products-simple problems.	**L1**
Module-2	
Differential Calculus: Review of successive differentiation. Formulae for n^{th} derivatives of standard functions- Liebnitz's theorem (without proof). Polar curves–angle between the radius vector and the tangent pedal equation- Problems. Maclaurin's series expansions- Illustrative examples. Partial Differentiation : Euler's theorem for homogeneous functions of two variables. Total derivatives-differentiation of composite and implicit function. Application to Jacobians.	**L1, L2**
Module-3	
Integral Calculus: Statement of reduction formulae for $sin^n x$, $cos^n x$, *and* $sin^m x\, cos^n x$ and evaluation of these with standard limits-Examples. Double and triple integrals-Simple examples.	**L1, L2**
Module-4	
Vector Differentiation: Differentiation of vector functions. Velocity and acceleration of a particle moving on a space curve. Scalar and vector point functions. Gradient, Divergence, Curl and Laplacian (Definitions only). Solenoidal and irrotational vector fields-Problems.	**L1, L2**
Module-5	
Ordinary differential equations (ODE's): Introduction-solutions of first order and first degree differential equations: homogeneous**,** exact, linear differential equations of order one and equations reducible to above types.	**L1, L2**

Course outcomes: On completion of the course, students are able to: • Understand the fundamental concepts of complex numbers and vector algebra to analyze the problems arising in related area. • Use derivatives and partial derivatives to calculate rates of change of multivariate functions. • Learn techniques of integration including double and triple integrals to find area, volume, mass and moment of inertia of plane and solid region. • Analyze position, velocity and acceleration in two or three dimensions using the calculus of vector valued functions. • Recognize and solve first-order ordinary differential equations occurring in different branches of engineering.	
Question paper pattern: • The question paper will have ten questions. • Each full Question consisting of 16 marks • There will be 2 full questions (with a maximum of four sub questions) from each module. • Each full question will have sub questions covering all the topics under a module. • The students will have to answer 5 full questions, selecting one full question from each module.	
Text Book: *B.S. Grewal: Higher Engineering Mathematics, Khanna Publishers, New Delhi, 43rd Ed., 2015.*	
Reference Books: 1. *E. Kreyszig: Advanced Engineering Mathematics, John Wiley & Sons, 10th Ed., 2015.* 2. *N.P.Bali and Manish Goyal: Engineering Mathematics, Laxmi Publishers, 7th Ed., 2007.*	

ANALOG ELECTRONICS [As per Choice Based Credit System (CBCS) scheme] SEMESTER – III (EC/TC)			
Subject Code	15EC32	IA Marks	20
Number of Lecture Hours/Week	04	Exam Marks	80
Total Number of Lecture Hours	50 (10 Hours per Module)	Exam Hours	03
CREDITS – 04			

Course objectives: This course will enable students to:

- Explain various BJT parameters, connections and configurations.
- Explain BJT Amplifier, Hybrid Equivalent and Hybrid Models.
- Explain construction and characteristics of JFETs and MOSFETs.
- Explain various types of FET biasing, and demonstrate the use of FET amplifiers.
- Construct frequency response of BJT and FET amplifiers at various frequencies.
- Analyze Power amplifier circuits in different modes of operation.
- Construct Feedback and Oscillator circuits using FET.

Modules	RBT Level
Module -1	
BJT AC Analysis: BJT Transistor Modeling, The re transistor model, Common emitter fixed bias, Voltage divider bias, Emitter follower configuration. Darlington connection-DC bias; The Hybrid equivalent model, Approximate Hybrid Equivalent Circuit- Fixed bias, Voltage divider, Emitter follower configuration; Complete Hybrid equivalent model, Hybrid π Model.	**L1, L2,L3**
Module -2	
Field Effect Transistors: Construction and Characteristics of JFETs, Transfer Characteristics, Depletion type MOSFET, Enhancement type MOSFET. **FET Amplifiers:** JFET small signal model, Fixed bias configuration, Self bias configuration, Voltage divider configuration, Common Gate configuration. Source-Follower Configuration, Cascade configuration.	**L1, L2, L3**
Module -3	
BJT and JFET Frequency Response: Logarithms, Decibels, Low frequency response – BJT Amplifier with RL, Low frequency response-FET Amplifier, Miller effect capacitance, High frequency response – BJT Amplifier, High frequency response-FET Amplifier, Multistage Frequency Effects.	**L1, L2, L3**
Module -4	

Feedback and Oscillator Circuits: Feedback concepts, Feedback connection types, Practical feedback circuits, Oscillator operation, FET Phase shift oscillator, Wien bridge oscillator, Tuned Oscillator circuit, Crystal oscillator, UJT construction, UJT Oscillator.	**L1,L2, L3**
Module -5	
Power Amplifiers: Definition and amplifier types, Series fed class A amplifier, Transformer coupled class A amplifier, Class B amplifier operation and circuits, Amplifier distortion, Class C and Class D amplifiers. **Voltage Regulators:** Discrete transistor voltage regulation - Series and Shunt Voltage regulators.	**L1, L2, L3**

Course Outcomes: After studying this course, students will be able to:

- Describe the working principle and characteristics of BJT, FET, Single stage, cascaded and feedback amplifiers.
- Describe the Phase shift, Wien bridge, tuned and crystal oscillators using BJT/FET/UJT.
- Calculate the AC gain and impedance for BJT using re and h parameters models for CE and CC configuration.
- Determine the performance characteristics and parameters of BJT and FET amplifier using small signal model.
- Determine the parameters which affect the low frequency and high frequency responses of BJT and FET amplifiers and draw the characteristics.
- Evaluate the efficiency of Class A and Class B power amplifiers and voltage regulators.

Question paper pattern:

- The question paper will have ten questions.
- Each full question consists of 16 marks.
- There will be 2 full questions (with a maximum of Three sub questions) from each module.
- Each full question will have sub questions covering all the topics under a module. The students will have to answer 5 full questions, selecting one full question from each module.

Text Book:

Robert L. Boylestad and Louis Nashelsky, "Electronics devices and Circuit theory", Pearson, 10th/11th Edition, 2012, ISBN:978-81-317-6459-6.

Reference Books:

1. Adel S. Sedra and Kenneth C. Smith, "Micro Electronic Circuits Theory and Application", 5th Edition ISBN:0198062257
2. Fundamentals of Microelectronics, Behzad Razavi, John Weily ISBN 2013 978-81-265-2307-8
3. J.Millman & C.C.Halkias–Integrated Electronics, 2nd edition, 2010, TMH. ISBN 0-07-462245-5
4. K. A. Navas, "Electronics Lab Manual", Volume I, PHI, 5th Edition, 2015, ISBN:9788120351424.

DIGITAL ELECTRONICS [As per Choice Based Credit System (CBCS) scheme] SEMESTER – III (EC/TC)			
Subject Code	15EC33	IA Marks	20
Number of Lecture Hours/Week	04	Exam Marks	80
Total Number of Lecture Hours	50 (10 Hours per Module)	Exam Hours	03

CREDITS – 04

Course objectives: This course will enable students to:

- Illustrate simplification of Algebraic equations using Karnaugh Maps and Quine-McClusky Techniques.
- Design combinational logic circuits.
- Design Decoders, Encoders, Digital Multiplexer, Adders, Subtractors and Binary Comparators.
- Describe Latches and Flip-flops, Registers and Counters.
- Analyze Mealy and Moore Models.
- Develop state diagrams Synchronous Sequential Circuits.

Modules	RBT Level
Module – 1	
Principles of combination logic: Definition of combinational logic, canonical forms, Generation of switching equations from truth tables, Karnaugh maps-3,4,5 variables, Incompletely specified functions (Don't care terms) Simplifying Max term equations, Quine-McCluskey minimization technique, Quine-McCluskey using don't care terms, Reduced prime implicants Tables.(Text 1, Chapter 3)	**L1, L2, L3**
Module -2	
Analysis and design of combinational logic: General approach to combinational logic design, Decoders, BCD decoders, Encoders, digital multiplexers, Using multiplexers as Boolean function generators, Adders and subtractors, Cascading full adders, Look ahead carry, Binary comparators.(Text 1, Chapter 4)	**L1, L2, L3**
Module -3	
Flip-Flops: Basic Bistable elements, Latches, Timing considerations, The master-slave flip-flops (pulse-triggered flip-flops): SR flip-flops,JK flip-flops, Edge triggered flip-flops, Characteristic equations. (Text 2, Chapter 6)	**L1,L2**
Module -4	
Simple Flip-Flops Applications: Registers, binary ripple counters, synchronous binary counters, Counters based on shift registers, Design of a synchronous counters, Design of a synchronous mod-n counter using clocked T , JK , D and SR flip-flops. (Text 2, Chapter 6)	**L1,L2, L3**

Module -5	
Sequential Circuit Design: Mealy and Moore models, State machine notation, Synchronous Sequential circuit analysis, Construction of state diagrams, counter design. (Text 1, Chapter 6)	**L1, L2, L3**

Course Outcomes: After studying this course, students will be able to:

- Develop simplified switching equation using Karnaugh Maps and Quine-McClusky techniques.
- Explain the operation of decoders, encoders, multiplexers, demultiplexers, adders, subtractors and comparators.
- Explain the working of Latches and Flip Flops (SR,D,T and JK).
- Design Synchronous/Asynchronous Counters and Shift registers using Flip Flops.
- Develop Mealy/Moore Models and state diagrams for the given clocked sequential circuits.
- Apply the knowledge gained in the design of Counters and Registers.

Question paper pattern:

- The question paper will have ten questions.
- Each full question consists of 16 marks.
- There will be 2 full questions (with a maximum of Three sub questions) from each module.
- Each full question will have sub questions covering all the topics under a module. The students will have to answer 5 full questions, selecting one full question from each module.

Text Books:

1. Digital Logic Applications and Design, John M Yarbrough, Thomson Learning, 2001. ISBN 981-240-062-1.
2. Donald D. Givone, "Digital Principles and Design", McGraw Hill, 2002. ISBN 978-0-07-052906-9.

Reference Books:

1. D. P. Kothari and J. S Dhillon, "Digital Circuits and Design", Pearson, 2016, ISBN:9789332543539.
2. Morris Mano, "Digital Design", Prentice Hall of India, Third Edition.
3. Charles H Roth, Jr., "Fundamentals of logic design", Cengage Learning.
4. K. A. Navas, "Electronics Lab Manual", Volume I, PHI, 5th Edition, 2015, ISBN: 9788120351424.

NETWORK ANALYSIS

[As per Choice Based Credit System (CBCS) scheme]

SEMESTER – III (EC/TC)

Subject Code	15EC34	IA Marks	20
Number	04	Exam Marks	80
Total Number of Lecture Hours	50 (10 Hours per Module)	Exam Hours	03

CREDITS – 04

Course objectives: This course enables students to:

- Describe basic network concepts emphasizing source transformation, source shifting, mesh and nodal techniques to solve for resistance/impedance, voltage, current and power.
- Explain network Thevenin's, Millman's, Superposition, Reciprocity, Maximum Power transfer and Norton's Theorems and apply them in solving the problems related to Electrical Circuits.
- Explain the behavior of networks subjected to transient conditions.
- Use applications of Laplace transforms to network problems.
- Describe Series and Parallel Combination of Passive Components as resonating circuits, related parameters and to analyze frequency response.
- Study two port network parameters like Z, Y, T and h and their inter-relationships and applications.

Modules	**RBT Level**
Module -1	
Basic Concepts: Practical sources, Source transformations, Network reduction using Star – Delta transformation, Loop and node analysis with linearly dependent and independent sources for DC and AC networks, Concepts of super node and super mesh.	**L1, L2,L3,L4**
Module -2	
Network Theorems: Superposition, Reciprocity, Millman's theorems, Thevinin's and Norton's theorems, Maximum Power transfer theorem.	**L1, L2, L3,L4**
Module -3	
Transient behavior and initial conditions: Behavior of circuit elements under switching condition and their Representation, evaluation of initial and final conditions in RL, RC and RLC circuits for AC and DC excitations. **Laplace Transformation & Applications**: Solution of networks, step, ramp and impulse responses, waveform Synthesis.	**L1, L2, L3,L4**
Module -4	
Resonant Circuits: Series and parallel resonance, frequency- response of series and Parallel circuits, Q–Factor, Bandwidth.	**L1, L2, L3,L4**
Module -5	

Two port network parameters: Definition of Z, Y, h and Transmission parameters, modeling with these parameters, relationship between parameters sets.	**L1, L2, L3,L4**

Course Outcomes: After studying this course, students will be able to:

- Determine currents and voltages using source transformation/ source shifting/ mesh/ nodal analysis and reduce given network using star-delta transformation/ source transformation/ source shifting.
- Solve network problems by applying Superposition/ Reciprocity/ Thevenin's/ Norton's/ Maximum Power Transfer/ Millman's Network Theorems and electrical laws to reduce circuit complexities and to arrive at feasible solutions.
- Calculate current and voltages for the given circuit under transient conditions.
- Apply Laplace transform to solve the given network.
- Evaluate for RLC elements/ frequency response related parameters like resonant frequency, quality factor, half power frequencies, voltage across inductor and capacitor, current through the RLC elements, in resonant circuits
- Solve the given network using specified two port network parameter like Z or Y or T or h.

Question paper pattern:

- The question paper will have ten questions.
- Each full question consists of 16 marks.
- There will be 2 full questions (with a maximum of Three sub questions) from each module.
- Each full question will have sub questions covering all the topics under a module.
- The students will have to answer 5 full questions, selecting one full question from each module.

Text Books:

1. M.E. Van Valkenberg (2000), "Network analysis", Prentice Hall of India, 3rd edition, 2000, ISBN: 9780136110958.

2. Roy Choudhury, "Networks and systems", 2nd edition, New Age International Publications, 2006, ISBN: 9788122427677.

Reference Books:

1. Hayt, Kemmerly and Durbin "Engineering Circuit Analysis", TMH 7th Edition, 2010.
2. J. David Irwin /R. Mark Nelms, "Basic Engineering Circuit Analysis", John Wiley, 8thed, 2006.
3. Charles K Alexander and Mathew N O Sadiku, " Fundamentals of Electric Circuits", Tata McGraw-Hill, 3rd Ed, 2009.

ELECTRONIC INSTRUMENTATION

[As per Choice Based Credit System (CBCS) scheme]

SEMESTER – III (EC/TC)

Subject Code	15EC35	IA Marks	20
Number of Lecture Hours/Week	04	Exam Marks	80
Total Number of Lecture Hours	50 (10 Hours per Module)	Exam Hours	03

CREDITS – 04

Course objectives: This course will enable students to:

- Define and describe accuracy and precision, types of errors, statistical and probability analysis.
- Describe the operation of Ammeters, Voltmeters, Multimeters and develop circuits for multirange Ammeters and Voltmeters.
- Describe functional concepts and operation of various Analog and Digital measuring instruments.
- Describe basic concepts and operation of Digital Voltmeters and Microprocessor based instruments.
- Describe and discuss functioning and types of Oscilloscopes, Signal generators, AC and DC bridges.
- Recognize and describe significance and working of different types of transducers.

Modules	RBT Level
Module -1 **Measurement and Error:** Definitions, Accuracy, Precision, Resolution and Significant Figures, Types of Errors, Measurement error combinations, Basics of Statistical Analysis. **(Text 2)** **Ammeters:** DC Ammeter, Multirange Ammeter, The Ayrton Shunt or Universal Shunt, Requirements of Shunt, Extending of Ammeter Ranges, RF Ammeter (Thermocouple), Limitations of Thermocouple. **(Text 1)** **Voltmeters and Multimeters:** Introduction, Basic Meter as a DC Voltmeter, DC Voltmeter, Multirange Voltmeter, Extending Voltmeter Ranges, Loading, AC Voltmeter using Rectifiers. Transistor Voltmeter, Differential Voltmeter, True RMS Voltmeter, Considerations in Choosing an Analog Voltmeter, Multimeter. **(Text 1)**	**L1, L2, L3**
Module -2	

Digital Voltmeters: Introduction, RAMP technique, Dual Slope Integrating Type DVM, Integrating Type DVM, Most Commonly used principles of ADC, Successive Approximations, Continuous Balance DVM, $3\frac{1}{2}$-Digit, Resolution and Sensitivity of Digital Meters, General Specifications of DVM, Microprocessor based Ramp type DVM. **(Text 1)** **Digital Instruments:** Introduction, Digital Multimeters, Digital Frequency Meter, Digital Measurement of Time, Universal Counter, Digital Tachometer, Digital pH Meter, Digital Phase Meter, Digital Capacitance Meter, Microprocessor based Instruments. **(Text 1)**	**L1, L2,L3**
Module -3	
Oscilloscopes: Introduction, Basic principles, CRT features, Block diagram of Oscilloscope, Simple CRO, Vertical Amplifier, Horizontal Deflecting System, Sweep or Time Base Generator, Storage Oscilloscope, Digital Readout Oscilloscope, Measurement of Frequency by Lissajous Method, Digital Storage Oscilloscope. **(Text 1)** **Signal Generators:** Introduction, Fixed and Variable AF Oscillator, Standard Signal Generator, Laboratory Type Signal Generator, AF sine and Square Wave Generator, Function Generator, Square and Pulse Generator, Sweep Generator. **(Text 1)**	**L1, L2**
Module -4	
Measuring Instruments: Output Power Meters, Field Strength Meter, Stroboscope, Phase Meter, Vector Impedance Meter, Q Meter, Megger, Analog pH Meter. **(Text 1)** **Bridges:** Introduction, Wheatstone's bridge, Kelvin's Bridge; AC bridges, Capacitance Comparison Bridge, Inductance Comparison Bridge, Maxwell's bridge, Wien's bridge, Wagner's earth connection. **(Text 1)**	**L1, L2,L3**
Module -5	
Transducers: Introduction, Electrical transducers, Selecting a transducer, Resistive transducer, Resistive position transducer, Strain gauges, Resistance thermometer, Thermistor, Inductive transducer, Differential output transducers, LVDT, Piezoelectric transducer, Photoelectric transducer, Photovoltaic transducer, Semiconductor photo diode and transistor, Temperature transducers-RTD. **(Text 1)**	**L1, L2, L3**
Course Outcomes: After studying this course, students will be able to: • Describe instrument measurement errors and calculate them. • Describe the operation of Ammeters, Voltmeters, Multimeters and develop circuits for multirange Ammeters and Voltmeters. • Describe functional concepts and operation of Digital voltmeters and instruments to measure voltage, frequency, time period, phase difference of signals, rotation speed, capacitance and pH of solutions. • Describe functional concepts and operation of various Analog measuring instruments to measure output power, field Strength, impedance, stroboscopic speed, in/out of phase, Q of coils, insulation resistance and pH. • Describe and discuss functioning and types of Oscilloscopes, Signal generators and Transducers. • Utilize AC and DC bridges for passive component and frequency measurements.	

Question paper pattern:

- The question paper will have ten questions.
- Each full question consists of 16 marks.
- There will be 2 full questions (with a maximum of Three sub questions) from each module.
- Each full question will have sub questions covering all the topics under a module.
- The students will have to answer 5 full questions, selecting one full question from each module.

Text Books:

1. H. S. Kalsi, "Electronic Instrumentation", McGraw Hill, 3rd Edition, 2012, ISBN:9780070702066.

2. David A. Bell, "Electronic Instrumentation & Measurements", Oxford University Press PHI 2nd Edition, 2006, ISBN 81-203-2360-2.

Reference Books:

1. A. D. Helfrick and W.D. Cooper, "Modern Electronic Instrumentation and Measuring Techniques", Pearson, 1st Edition, 2015,ISBN:9789332556065.
2. A. K. Sawhney, "Electronics and Electrical Measurements", Dhanpat Rai & Sons. ISBN -81-7700-016-0

ENGINEERING ELECTROMAGNETICS

[As per Choice Based Credit System (CBCS) scheme]

SEMESTER – III (EC/TC)

Subject Code	15EC36	IA Marks	20
Number of Lecture Hours/Week	04	Exam Marks	80
Total Number of Lecture Hours	50 (10 Hours per Module)	Exam Hours	03

CREDITS – 04

Course objectives: This course will enable students to:

- Study the different coordinate systems, Physical signifiance of Divergence, Curl and Gradient.
- Understand the applications of Coulomb's law and Gauss law to different charge distributions and the applications of Laplace's and Poisson's Equations to solve real time problems on capacitance of different charge distributions.
- Understand the physical significance of Biot-Savart's, Amperes's Law and Stokes' theorem for different current distributions.
- Infer the effects of magnetic forces, materials and inductance.
- Know the physical interpretation of Maxwell' equations and applications for Plane waves for their behaviour in different media
- Acquire knowledge of Poynting theorem and its application of power flow.

Modules	**RBT Level**
Module - 1	
Coulomb's Law, Electric Field Intensity and Flux density Experimental law of Coulomb, Electric field intensity, Field due to continuous volume charge distribution, Field of a line charge, Electric flux density.	**L1, L2, L3**
Module -2	
Gauss's law and Divergence Gauss' law, Divergence. Maxwell's First equation (Electrostatics), Vector Operator ▼ and divergence theorem. **Energy, Potential and Conductors** Energy expended in moving a point charge in an electric field, The line integral, Definition of potential difference and potential, The potential field of point charge, Current and Current density, Continuity of current.	**L1, L2, L3**
Module -3	
Poisson's and Laplace's Equations Derivation of Poisson's and Laplace's Equations, Uniqueness theorem, Examples of the solution of Laplace's equation. **Steady Magnetic Field** Biot-Savart Law, Ampere's circuital law, Curl, Stokes' theorem, Magnetic flux and magnetic flux density, Scalar and Vector Magnetic Potentials.	**L1, L2, L3**
Module -4	

Magnetic Forces Force on a moving charge, differential current elements, Force between differential current elements. **Magnetic Materials** Magnetisation and permeability, Magnetic boundary conditions, Magnetic circuit, Potential Energy and forces on magnetic materials.	**L1, L2, L3**
Module -5	
Time-varying fields and Maxwell's equations Farday's law, displacement current, Maxwell's equations in point form, Maxwell's equations in integral form. **Uniform Plane Wave** Wave propagation in free space and good conductors. Poynting's theorem and wave power, Skin Effect.	**L1, L2, L3**

Course Outcomes: After studying this course, students will be able to:

- Evaluate problems on electric field due to point, linear, volume charges by applying conventional methods or by Gauss law.
- Determine potential and energy with respect to point charge and capacitance using Laplace equation.
- Calculate magnetic field, force, and potential energy with respect to magnetic materials.
- Apply Maxwell's equation for time varying fields, EM waves in free space and conductors.
- Evaluate power associated with EM waves using Poynting theorem.

Question paper pattern:

- The question paper will have ten questions.
- Each full question consisting of 16 marks.
- There will be 2 full questions (with a maximum of Three sub questions) from each module.
- Each full question will have sub questions covering all the topics under a module.
- The students will have to answer 5 full questions, selecting one full question from each module.

Text Book:

W.H. Hayt and J.A. Buck, "Engineering Electromagnetics", 7th Edition, Tata McGraw-Hill, 2009, ISBN-978-0-07-061223-5.

Reference Books:

1. John Krauss and Daniel A Fleisch, " Electromagnetics with applications", McGraw-Hill.
2. N. Narayana Rao, "Fundamentals of Electromagnetics for Engineering", Pearson.

ANALOG ELECTRONICS LABORATORY

[As per Choice Based Credit System (CBCS) scheme]

SEMESTER – III (EC/TC)

Laboratory Code	15ECL37	IA Marks	20
Number of Lecture Hours/Week	01Hr Tutorial (Instructions) + 02 Hours Laboratory	Exam Marks	80
RBT Level	L1, L2, L3	Exam Hours	03

CREDITS – 02

Course objectives: This laboratory course enables students to get practical experience in design, assembly, testing and evaluation of:

- Rectifiers and Voltage Regulators.
- BJT characteristics and Amplifiers.
- JFET Characteristics and Amplifiers.
- MOSFET Characteristics and Amplifiers
- Power Amplifiers.
- RC-Phase shift, Hartley, Colpitts and Crystal Oscillators.

NOTE: The experiments are to be carried using discrete components only.

Laboratory Experiments:

1. Design and set up the following rectifiers with and without filters and to determine ripple factor and rectifier efficiency:
   (a)Full Wave Rectifier (b) Bridge Rectifier
2. Conduct experiment to test diode clipping (single/double ended) and clamping circuits (positive/negative).
3. Conduct an experiment on Series Voltage Regulator using Zener diode and power transistor to determine line and load regulation characteristics.
4. Realize BJT Darlington Emitter follower with and without bootstrapping and determine the gain, input and output impedances.
5. Design and set up the BJT common emitter amplifier using voltage divider bias with and without feedback and determine the gain- bandwidth product from its frequency response.
6. Plot the transfer and drain characteristics of a JFET and calculate its drain resistance, mutual conductance and amplification factor.
7. Design, setup and plot the frequency response of Common Source JFET/MOSFET amplifier and obtain the bandwidth.

8. Plot the transfer and drain characteristics of n-channel MOSFET and calculate its parameters, namely; drain resistance, mutual conductance and amplification factor.

9. Set-up and study the working of complementary symmetry class B push pull power amplifier and calculate the efficiency.

10. Design and set-up the RC-Phase shift Oscillator using FET, and calculate the frequency of output waveform.

11. Design and set-up the following tuned oscillator circuits using BJT, and determine the frequency of oscillation.
(a) Hartley Oscillator (b) Colpitts Oscillator

12. Design and set-up the crystal oscillator and determine the frequency of oscillation.

Course Outcomes: On the completion of this laboratory course, the students will be able to:

- Test circuits of rectifiers, clipping circuits, clamping circuits and voltage regulators.
- Determine the characteristics of BJT and FET amplifiers and plot its frequency response.
- Compute the performance parameters of amplifiers and voltage regulators
- Design and test the basic BJT/FET amplifiers, BJT Power amplifier and oscillators.

Conduct of Practical Examination:

- All laboratory experiments are to be included for practical examination.
- Students are allowed to pick one experiment from the lot.
- Strictly follow the instructions as printed on the cover page of answer script for breakup of marks.
- Change of experiment is allowed only once and Marks allotted to the procedure part to be made zero.

DIGITAL ELECTRONICS LABORATORY

[As per Choice Based Credit System (CBCS) scheme]

SEMESTER – III (EC/TC)

Laboratory Code	15ECL38	IA Marks	20
Number of Lecture Hours/Week	01Hr Tutorial (Instructions) + 02 Hours Laboratory	Exam Mark	80
RBT Level	L1, L2, L3	Exam Hour	03

CREDITS – 02

Course objectives: This laboratory course enables students to get practical experience in design, realisation and verification of

- Demorgan's Theorem, SOP, POS forms
- Full/Parallel Adders, Subtractors and Magnitude Comparator
- Multiplexer using logic gates
- Demultiplexers and Decoders
- Flip-Flops, Shift registers and Counters

NOTE:

1. Use discrete components to test and verify the logic gates. The IC umbers given are suggestive. Any equivalent IC can be used.
2. For experiment No. 11 and 12 any open source or licensed simulation tool may be used.

Laboratory Experiments:

1. Verify
   (a) Demorgan's Theorem for 2 variables.
   (b) The sum-of product and product-of-sum expressions using universal gates.
2. Design and implement
   (a) Full Adder using basic logic gates.
   (b) Full subtractor using basic logic gates.
3. Design and implement 4-bit Parallel Adder/ subtractor using IC 7483.
4. Design and Implementation of 4-bit Magnitude Comparator using IC 7485.
5. Realize
   (a) 4:1 Multiplexer using gates.
   (b) 3-variable function using IC 74151(8:1MUX).
6. Realize 1:8 Demux and 3:8 Decoder using IC74138.
7. Realize the following flip-flops using NAND Gates.
   (a) Clocked SR Flip-Flop (b) JK Flip-Flop.
8. Realize the following shift registers using IC7474
   (a) SISO (b) SIPO (c) PISO (d) PIPO.
9. Realize the Ring Counter and Johnson Counter using IC7476.
10. Realize the Mod-N Counter using IC7490.

11. Simulate Full- Adder using simulation tool.
12. Simulate Mod-8 Synchronous UP/DOWN Counter using simulation tool.
Course outcomes: On the completion of this laboratory course, the students will be able to: • Demonstrate the truth table of various expressions and combinational circuits using logic gates. • Design and test various combinational circuits such as adders, subtractors, comparators, multiplexers and demultiplexers. • Construct and test flips-flops, counters and shift registers. • Simulate full adder and up/down counters.
Conduct of Practical Examination: • All laboratory experiments are to be included for practical examination. • Students are allowed to pick one experiment from the lot. • Strictly follow the instructions as printed on the cover page of answer script for breakup of marks. • Change of experiment is allowed only once and 15% Marks allotted to the procedure part to be made zero.

B.E E&C FOURTH SEMESTER SYLLABUS

ENGINEERING MATHEMATICS-IV
B.E., IV Semester, Common to all Branches
[As per Choice Based Credit System (CBCS) scheme]

Subject Code	15MAT41	IA Marks	20
Number of Lecture Hours/Week	04	Exam marks	80
Total Number of Lecture Hours	50 (10 Hours per Module)		

Credits – 04

Course Objectives: This course will enable students to:

- Conversant with numerical methods to solve ordinary differential equations, complex analysis, sampling theory and joint probability distribution and stochastic processes arising in science and engineering.

Modules	RBT Level
Module-1	
Numerical Methods: Numerical solution of ordinary differential equations of first order and first degree, Taylor's series method, modified Euler's method, Runge - Kutta method of fourth order. Milne's and Adams-Bashforth predictor and corrector methods (No derivations of formulae).	L1, L3
Module-2	
Numerical Methods: Numerical solution of second order ordinary differential equations, Runge-Kutta method and Milne's method. **Special Functions:** Series solution-Frobenious method. Series solution of Bessel's differential equation leading to $J_n(x)$-Bessel's function of first kind. Basic properties and orthogonality. Series solution of Legendre's differential equation leading to $P_n(x)$-Legendre polynomials. Rodrigue's formula, problems.	L3
Module-3	
Complex Variables: Review of a function of a complex variable, limits, continuity, differentiability. Analytic functions-Cauchy-Riemann equations in cartesian and polar forms. Properties and construction of analytic functions. Complex line integrals-Cauchy's theorem and Cauchy's integral formula, Residue, poles, Cauchy's Residue theorem (without proof) and problems.	L1, L3,
Transformations: Conformal transformations, discussion of transformations: $w=z^2$, $w=e^z$, $w=z+(1/z)(z\neq 0)$ and bilinear transformations-problems.	L3
Module-4	
Probability Distributions: Random variables (discrete and continuous), probability mass/density functions. Binomial distribution, Poisson distribution. Exponential and normal distributions, problems.	L3

Joint probability distribution: Joint Probability distribution for two discrete random variables, expectation, covariance, correlation coefficient.	
Module-5	
Sampling Theory: Sampling, Sampling distributions, standard error, test of hypothesis for means and proportions, confidence limits for means, student's t-distribution, Chi-square distribution as a test of goodness of fit. **Stochastic process:** Stochastic processes, probability vector, stochastic matrices, fixed points, regular stochastic matrices, Markov chains, higher transition probability-simple problems.	L3 L1
Course Outcomes: On completion of this course, students are able to: • Solve first and second order ordinary differential equations arising in flow problems using single step and multistep numerical methods. • Understand the analyticity, potential fields, residues and poles of complex potentials in field theory and electromagnetic theory. • Describe conformal and bilinear transformation arising in aerofoil theory, fluid flow visualization and image processing. • Solve problems of quantum mechanics, hydrodynamics and heat conduction by employing Bessel's function relating to cylindrical polar coordinate systems and Legendre's polynomials relating to spherical polar coordinate systems. • Solve problems on probability distributions relating to digital signal processing, information theory and optimization concepts of stability of design and structural engineering. • Draw the validity of the hypothesis proposed for the given sampling distribution in accepting or rejecting the hypothesis. • Determine joint probability distributions and stochastic matrix connected with the multivariable correlation problems for feasible random events. • Define transition probability matrix of a Markov chain and solve problems related to discrete parameter random process.	
Question paper pattern: • The question paper will have ten questions. • Each full Question consisting of 16 marks • There will be 2 full questions (with a maximum of four sub questions) from each module. • Each full question will have sub questions covering all the topics under a module. • The students will have to answer 5 full questions, selecting one full question from each module.	
Text Books: 1. *B.S. Grewal: Higher Engineering Mathematics, Khanna Publishers, 43rd Ed., 2015.*	

2. *E. Kreyszig: Advanced Engineering Mathematics, John Wiley & Sons,10th Ed., 2015.*	
Reference Books: 1. *N.P.Bali and Manish Goyal: A Text Book of Engineering Mathematics, Laxmi Publishers,7th Ed., 2010.* 2. *B.V.Ramana: "Higher Engineering Mathematics" Tata McGraw-Hill, 2006.* 3. *H. K. Dass and Er. Rajnish Verma: "Higher Engineering Mathematics", S. Chand publishing, 1st edition, 2011.*	
Web Link and Video Lectures: 1. *http://nptel.ac.in/courses.php?disciplineID=111* **2.** *http://www.khanacademy.org/* **3.** *http://www.class-central.com/subject/math*	

ADDITIONAL MATHEMATICS - II

B.E., IV Semester, Common to all Branches

(A Bridge course for Lateral Entry students of IV Sem. B. E.)

[As per Choice Based Credit System (CBCS) scheme]

Subject Code	15MATDIP41	IA Marks	--
Number of Lecture Hours/Week	03	Exam marks	80
Total Number of Lecture Hours	40 (08 Hours per Module)		

Credits – 00

Course Objectives: This course will enable students to:

- Understand essential concepts of linear algebra.
- Solve second and higher order differential equations.
- Understand Laplace and inverse Laplace transforms and elementary probability theory.

Modules	RBT Level
Module-1	
Linear Algebra: Introduction - rank of matrix by elementary row operations - Echelon form. Consistency of system of linear equations - Gauss elimination method. Eigen values and Eigen vectors of a square matrix. Application of Cayley-Hamilton theorem (without proof) to compute the inverse of a matrix-Examples.	**L1,L3**
Module-2	
Higher order ODE's: Linear differential equations of second and higher order equations with constant coefficients. Homogeneous /non-homogeneous equations. Inverse differential operators. Solutions of initial value problems. Method of undetermined coefficients and variation of parameters.	**L1,L3**
Module-3	
Laplace transforms: Laplace transforms of elementary functions. Transforms of derivatives and integrals**,** transforms of periodic function and unit step function-Problems only.	**L1,L2**
Module-4	
Inverse Laplace transforms: Definition of inverse Laplace transforms. Evaluation of Inverse transforms by standard methods. Application to solutions of Linear differential equations and simultaneous differential equations.	**L1,L2**
Module-5	
Probability: Introduction. Sample space and events. Axioms of probability. Addition and multiplication theorems. Conditional probability – illustrative examples. Bayes's theorem-examples.	**L1,L2**
Course Outcomes: On completion of this course, students are able to: • Solve systems of linear equations in the different areas of linear algebra. • Solve second and higher order differential equations occurring in of electrical circuits, damped/un-damped vibrations.	

• Describe Laplace transforms of standard and periodic functions. • Determine the general/complete solutions to linear ODE using inverse Laplace transforms. • Recall basic concepts of elementary probability theory and, solve problems related to the decision theory, synthesis and optimization of digital circuits.	
Question paper pattern: • The question paper will have ten questions. • Each full Question consisting of 16 marks • There will be 2 full questions (with a maximum of four sub questions) from each module. • Each full question will have sub questions covering all the topics under a module. • The students will have to answer 5 full questions, selecting one full question from each module.	
Text Book: *B.S. Grewal: Higher Engineering Mathematics, Khanna Publishers, 43rd Ed., 2015.*	
Reference Books: *1. E. Kreyszig: Advanced Engineering Mathematics, John Wiley & Sons, 10th Ed., 2015.* *2. N.P.Bali and Manish Goyal: A Text Book of Engineering Mathematics, Laxmi Publishers,7th Ed., 2007.*	

MICROPROCESSORS

[As per Choice Based Credit System (CBCS) scheme]

SEMESTER – IV (EC/TC)

Subject Code	15EC42	IA Marks	20
Number of Lecture Hours/Week	04	Exam Marks	80
Total Number of Lecture Hours	50 (10 Hours per Module)	Exam Hours	03

CREDITS – 04

Course objectives: This course will enable students to:

- Familiarize basic architecture of 8086 microprocessor
- Program 8086 Microprocessor using Assembly Level Language
- Use Macros and Procedures in 8086 Programs
- Understand interfacing of 16 bit microprocessor with memory and peripheral chips involving system design
- Understand the architecture of 8088, 8087 Coprocessor and other CPU architectures

Modules	**RBT Level**
Module -1	
8086 PROCESSOR: Historical background (refer Reference Book 1), 8086 CPU Architecture (1.1 – 1.3 of Text). Addressing modes, Machine language instruction formats, Machine coding the program (2.2, 2.1, 3.2 of Text). **INSTRUCTION SET OF 8086:** Data transfer and arithmetic instructions. Control/Branch Instructions, Illustration of these instructions with example programs (2.3 of Text).	**L1, L2, L3**
Module -2	
Logical Instructions, String manipulation instructions, Flag manipulation and Processor control instructions, Illustration of these instructions with example programs. Assembler Directives and Operators, Assembly Language Programming and example programs (2.3, 2.4, 3.4 of Text).	**L1, L2, L3**
Module -3	
Stack and Interrupts: Introduction to stack, Stack structure of 8086, Programming for Stack. Interrupts and Interrupt Service routines, Interrupt cycle of 8086, NMI, INTR, Interrupt programming, Passing parameters to procedures, Macros, Timing and Delays. (Chap. 4 of Text).	**L1, L2, L3**
Module -4	

8086 Bus Configuration and Timings: Physical memory Organization, General Bus operation cycle, I/O addressing capability, Special processor activities, Minimum mode 8086 system and Timing diagrams, Maximum Mode 8086 system and Timing diagrams. (1.4 to 1.9 of Text). **Basic Peripherals and their Interfacing with 8086 (Part 1)**: Static RAM Interfacing with 8086 (5.1.1), Interfacing I/O ports, PIO 8255, Modes of operation – Mode-0 and BSR Mode, Interfacing Keyboard and 7-Segment digits using 8255 (Refer 5.3, 5.4, 5.5 of Text).	**L1, L2, L3**
Module 5	
Basic Peripherals and their Interfacing with 8086 (Part 2): Interfacing ADC-0808/0809, DAC-0800, Stepper Motor using 8255 (5.6.1, 5.7.2, 5.8). Timer 8254 – Mode 0, 1, 2 & 3 and Interfacing programmes for these modes (refer 6.1 of Text). **INT 21H DOS Function calls** - for handling Keyboard and Display (refer Appendix-B of Text). **Other Architectures:** Architecture of 8088 (refer 1.10 upto 1.10.1 of Text) and Architecture of NDP 8087 (refer 8.3.1, 8.3.5 of Text). Von-Neumann & Harvard CPU architecture and CISC & RISC CPU architecture (refer Reference Book 1).	**L1, L2, L3**

Course Outcomes: At the end of the course students will be able to:

- Explain the History of evaluation of Microprocessors, Architecture and instruction set of 8086, 8088, 8087, CISC & RISC, Von-Neumann & Harvard CPU Architecture, Configuration & Timing diagrams of 8086 and Instruction set of 8086.
- Write8086 Assembly level programs using the 8086 instruction set
- Write modular programs using procedures and macros.
- Write 8086 Stack and Interrupts programming
- Interface 8086 to Static memory chips and 8255, 8254, 0808 ADC, 0800 DAC, Keyboard, Display and Stepper motors.
- Use INT 21 DOS interrupt function calls to handle Keyboard and Display.

Question paper pattern:

- The question paper will have ten questions.
- Each full Question consisting of 16 marks
- There will be 2 full questions (with a maximum of Three sub questions) from each module.
- Each full question will have sub questions covering all the topics under a module.
- The students will have to answer 5 full questions, selecting one full question from each module.

Text Book:

Advanced Microprocessors and Peripherals - A.K. Ray and K.M. Bhurchandi, TMH, 3rd Edition, 2012, ISBN 978-1-25-900613-5.

Reference Books:

1. **Microprocessor and Interfacing**- Douglas V Hall, SSSP Rao, 3rd edition TMH, 2012.
2. **Microcomputer systems-The 8086 / 8088 Family** – Y.C. Liu and A. Gibson, 2nd edition, PHI -2003.
3. **The 8086 Microprocessor: Programming & Interfacing the PC** – Kenneth J Ayala, CENGAGE Learning, 2011.
4. **The Intel Microprocessor, Architecture, Programming and Interfacing** - Barry B. Brey, 6e, Pearson Education / PHI, 2003.

CONTROL SYSTEMS

[As per Choice Based Credit System (CBCS) scheme]

SEMESTER – IV (EC/TC)

Subject Code	15EC43	IA Marks	20
Number of Lecture Hours/Week	04	Exam Marks	80
Total Number of Lecture Hours	50(10 Hours per Module)	Exam Hours	03

CREDITS – 04

Course objectives: This course will enable students to:

- Understand the basic features, configurations and application of control systems.
- Understand various terminologies and definitions for the control systems.
- Learn how to find a mathematical model of electrical, mechanical and electro-mechanical systems.
- Know how to find time response from the transfer function.
- Find the transfer function via Masons' rule.
- Analyze the stability of a system from the transfer function.

Modules	**RBT Level**
Module -1	
Introduction to Control Systems: Types of Control Systems, Effect of Feedback Systems, Differential equation of Physical Systems – Mechanical Systems, Electrical Systems, Analogous Systems. Block diagrams and signal flow graphs: Transfer functions, Block diagram algebra and Signal Flow graphs.	**L1, L2, L3**
Module -2	
Time Response of feedback control systems: Standard test signals, Unit step response of First and Second order Systems. Time response specifications, Time response specifications of second order systems, steady state errors and error constants. Introduction to PI, PD and PID Controllers (excluding design).	**L1, L2, L3**
Module -3	
Stability analysis: Concepts of stability, Necessary conditions for Stability, Routh stability criterion, Relative stability analysis: more on the Routh stability criterion, Introduction to Root-Locus Techniques, The root locus concepts, Construction of root loci.	**L1, L2, L3**
Module -4	

Frequency domain analysis and stability: Correlation between time and frequency response, Bode Plots, Experimental determination of transfer function. Introduction to Polar Plots, (Inverse Polar Plots excluded) Mathematical preliminaries, Nyquist Stability criterion, (Systems with transportation lag excluded) Introduction to lead, lag and lead-lag compensating networks (excluding design).	**L1, L2, L3**
Module -5	
Introduction to Digital Control System: Introduction, Spectrum Analysis of Sampling process, Signal reconstruction, Difference equations. Introduction to State variable analysis: Introduction, Concept of State, State variables & State model, State model for Linear Continuous & Discrete time systems, Diaganolisation.	**L1, L2, L3**

Course Outcomes: At the end of the course, the students will be able to

- Develop the mathematical model of mechanical and electrical systems
- Develop transfer function for a given control system using block diagram reduction techniques and signal flow graph method
- Determine the time domain specifications for first and second order systems
- Determine the stability of a system in the time domain using Routh-Hurwitz criterion and Root-locus technique.
- Determine the stability of a system in the frequency domain using Nyquist and bode plots
- Develop a control system model in continuous and discrete time using state variable techniques

Question paper pattern:

- The question paper will have ten questions.
- Each full Question consisting of 16 marks
- There will be 2 full questions (with a maximum of Three sub questions) from each module.
- Each full question will have sub questions covering all the topics under a module.
- The students will have to answer 5 full questions, selecting one full question from each module.

Text Book:

J.Nagarath and M.Gopal, " Control Systems Engineering", New Age International (P) Limited, Publishers, Fifth edition-2005, ISBN: 81-224-2008-7.

Reference Books:

1. "Modern Control Engineering," K.Ogata, Pearson Education Asia/PHI, 4th Edition, 2002. ISBN 978-81-203-4010-7.
2. "Automatic Control Systems", Benjamin C. Kuo, John Wiley India Pvt. Ltd., 8th Edition, 2008.
3. "Feedback and Control System," Joseph J Distefano III et al., Schaum's Outlines, TMH, 2nd Edition 2007.

SIGNALS AND SYSTEMS

[As per Choice Based Credit System (CBCS) scheme]

SEMESTER – IV (EC/TC)

Subject Code	15EC44	IA Marks	20
Number of Lecture Hours/Week	04	Exam Marks	80
Total Number of Lecture Hours	50(10 Hours per Module)	Exam Hours	03

CREDITS – 04

Course objectives: This course will enable students to:

- Understand the mathematical description of continuous and discrete time signals and systems.
- Analyze the signals in time domain using convolution difference/differential equations
- Classify signals into different categories based on their properties.
- Analyze Linear Time Invariant (LTI) systems in time and transform domains.
- Build basics for understanding of courses such as signal processing, control system and communication.

Modules	RBT Level
Module -1	
Introduction and Classification of signals: Definition of signal and systems, communication and control systems as examples. Sampling of analog signals, Continuous time and discrete time signal, Classification of signals as even, odd, periodic and non-periodic, deterministic and non-deterministic, energy and power. **Elementary signals/Functions:** Exponential, sine, impulse, step and its properties, ramp, rectangular, triangular, signum, sync functions. **Operations on signals:** Amplitude scaling, addition, multiplication, differentiation, integration (Accumulator for DT), time scaling, time shifting and time folding. **Systems:** Definition, Classification: linear and non-linear, time variant and invariant, causal and non- causal, static and dynamic, stable and unstable, invertible.	**L1, L2, L3**
Module -2	
Time domain representation of LTI System: System modeling: Input-output relation, definition of impulse response, convolution sum, convolution integral, computation of convolution integral and convolution sum using graphical method for unit step to unit step, unit step to exponential, exponential to exponential, unit step to rectangular and rectangular to rectangular only. Properties of convolution.	**L1, L2, L3**
Module -3	

System interconnection, system properties in terms of impulse response, step response in terms of impulse response (4 Hours). **Fourier Representation of Periodic Signals**: Introduction to CTFS and DTFS, definition, properties (No derivation) and basic problems (inverse Fourier series is excluded) (06 Hours).	**L1, L2, L3**
Module -4	
Fourier Representation of aperiodic Signals: **FT representation of aperiodic CT signals - FT,** definition, FT of standard CT signals, Properties and their significance (4 Hours). **FT representation of aperiodic discrete signals-DTFT**, definition, DTFT of standard discrete signals, Properties and their significance (4 Hours). **Impulse sampling and reconstruction:** Sampling theorem (only statement) and reconstruction of signals (2 Hours).	**L1, L2, L3**
Module -5	
Z-Transforms: Introduction, the Z-transform, properties of the Region of convergence, Properties of the Z-Transform, Inversion of the Z-Transform, Transform analysis of LTI systems.	**L1, L2, L3**

Course Outcomes: At the end of the course, students will be able to:

- Classify the signals as continuous/discrete, periodic/aperiodic, even/odd, energy/power and deterministic/random signals.
- Determine the linearity, causality, time-invariance and stability properties of continuous and discrete time systems.
- Compute the response of a Continuous and Discrete LTI system using convolution integral and convolution sum.
- Determine the spectral characteristics of continuous and discrete time signal using Fourier analysis.
- Compute Z-transforms, inverse Z- transforms and transfer functions of complex LTI systems.

Question paper pattern:

- The question paper will have ten questions.
- Each full Question consisting of 16 marks
- There will be 2 full questions (with a maximum of Three sub questions) from each module.
- Each full question will have sub questions covering all the topics under a module.
- The students will have to answer 5 full questions, selecting one full question from each module.

Text Book:

Simon Haykins and Barry Van Veen, "Signals and Systems", 2nd Edition, 2008, WileyIndia. ISBN 9971-51-239-4.

Reference Books:

1. **Michael Roberts,** "Fundamentals of Signals & Systems", 2nd edition, Tata McGraw-Hill, 2010, ISBN 978-0-07-070221-9.
2. **Alan V Oppenheim, Alan S, Willsky and A Hamid Nawab,** "Signals and Systems" Pearson Education Asia / PHI, 2nd edition, 1997. Indian Reprint 2002.
3. **H. P Hsu, R. Ranjan,** "Signals and Systems", Scham's outlines, TMH, 2006.
4. **B. P. Lathi,** "Linear Systems and Signals", Oxford University Press, 2005.
5. **Ganesh Rao and Satish Tunga,** "Signals and Systems", Pearson/Sanguine Technical Publishers, 2004.

PRINCIPLES OF COMMUNICATION SYSTEMS

[As per Choice Based Credit System (CBCS) scheme]

SEMESTER – IV (EC/TC)

Subject Code	15EC45	IA Marks	20
Number of Lecture Hours/Week	04	Exam Marks	80
Total Number of Lecture Hours	50(10 Hours per Module)	Exam Hours	03

CREDITS – 04

Course objectives: This course will enable students to:

- Design simple systems for generating and demodulating AM, DSB, SSB and VSB signals.
- Understand the concepts in Angle modulation for the design of communication systems.
- Design simple systems for generating and demodulating frequency modulated signals.
- Learn the concepts of random process and various types of noise.
- Evaluate the performance of the communication system in presence of noise.
- Analyze pulse modulation and sampling techniques.

Modules	RBT Level
Module – 1	
AMPLITUDE MODULATION: Introduction, Amplitude Modulation: Time & Frequency – Domain description, Switching modulator, Envelop detector. **DOUBLE SIDE BAND-SUPPRESSED CARRIER MODULATION:** Time and Frequency – Domain description, Ring modulator, Coherent detection, Costas Receiver, Quadrature Carrier Multiplexing. **SINGLE SIDE–BAND AND VESTIGIAL SIDEBAND METHODS OF MODULATION:** SSB Modulation, VSB Modulation, Frequency Translation, Frequency- Division Multiplexing, Theme Example: VSB Transmission of Analog and Digital Television. (Chapter 3 of Text).	**L1, L2, L3**
Module – 2	
ANGLE MODULATION: Basic definitions, Frequency Modulation: Narrow Band FM, Wide Band FM, Transmission bandwidth of FM Signals, Generation of FM Signals, Demodulation of FM Signals, FM Stereo Multiplexing, Phase–Locked Loop: Nonlinear model of PLL, Linear model of PLL, Nonlinear Effects in FM Systems. The Superheterodyne Receiver (refer Chapter 4 of Text).	**L1, L2, L3**
Module – 3	

RANDOM VARIABLES & PROCESS: Introduction, Probability, Conditional Probability, Random variables, Several Random Variables. Statistical Averages: Function of a random variable, Moments, Random Processes, Mean, Correlation and Covariance function: Properties of autocorrelation function, Cross–correlation functions (refer Chapter 5 of Text). **NOISE**: Shot Noise, Thermal noise, White Noise, Noise Equivalent Bandwidth (refer Chapter 5 of Text), Noise Figure (refer Section 6.7 of Text).	**L1, L2, L3**
Module – 4	
NOISE IN ANALOG MODULATION: Introduction, Receiver Model, Noise in DSB-SC receivers, Noise in AM receivers, Threshold effect, Noise in FM receivers, Capture effect, FM threshold effect, FM threshold reduction, Pre-emphasis and De-emphasis in FM (refer Chapter 6 of Text).	**L1, L2, L3**
Module – 5	
DIGITAL REPRESENTATION OF ANALOG SIGNALS: Introduction, Why Digitize Analog Sources?, The Sampling process, Pulse Amplitude Modulation, Time Division Multiplexing, Pulse-Position Modulation, Generation of PPM Waves, Detection of PPM Waves, The Quantization Process, Quantization Noise, Pulse–Code Modulation: Sampling, Quantization, Encoding, Regeneration, Decoding, Filtering, Multiplexing (refer Chapter 7 of Text), Application to Vocoder (refer Section 6.8 of Reference Book 1).	**L1, L2, L3**

Course Outcomes: At the end of the course, students will be able to:

- Determine the performance of analog modulation schemes in time and frequency domains.
- Determine the performance of systems for generation and detection of modulated analog signals.
- Characterize analog signals in time domain as random processes and in frequency domain using Fourier transforms.
- Characterize the influence of channel on analog modulated signals
- Determine the performance of analog communication systems.
- Understand the characteristics of pulse amplitude modulation, pulse position modulation and pulse code modulation systems.

Question paper pattern:

- The question paper will have ten questions.
- Each full Question consisting of 16 marks.
- There will be 2 full questions (with a maximum of Three sub questions) from each module.
- Each full question will have sub questions covering all the topics under a module.
- The students will have to answer 5 full questions, selecting one full question from each module.

Text Book:

Communication Systems, Simon Haykins & Moher, 5th Edition, John Willey, India Pvt. Ltd, 2010, ISBN 978 – 81 – 265 – 2151 – 7.

Reference Books:

1. **Modern Digital and Analog Communication Systems,** B. P. Lathi, Oxford University Press., 4th edition.
2. **An Introduction to Analog and Digital Communication**, Simon Haykins, John Wiley India Pvt. Ltd., 2008, ISBN 978–81–265–3653–5.
3. **Principles of Communication Systems**, H.Taub & D.L.Schilling, TMH, 2011.
4. **Communication Systems**, Harold P.E, Stern Samy and A.Mahmond, Pearson Edition, 2004.
5. **Communication Systems**: **Analog and Digital,** R.P.Singh and S.Sapre: TMH 2nd edition, 2007.

LINEAR INTEGRATED CIRCUITS

[As per Choice Based Credit System (CBCS) scheme]

SEMESTER – IV (EC/TC)

Subject Code	15EC46	IA Marks	20
Number of Lecture Hours/Week	04	Exam Marks	80
Total Number of Lecture Hours	50(10 Hours per Module)	Exam Hours	03

CREDITS – 04

Course objectives: This course will enable students to:

- Define and describe various parameters of Op-Amp, its characteristics and specifications.
- Discuss the effects of Input and Output voltage ranges upon Op-Amp circuits.
- Sketch and Analyze Op-Amp circuits to determine Input Impedances, output Impedances and other performance parameters.
- Sketch and Explain typical Frequency Response graphs for each of the Filter circuits showing Butterworth and Chebyshev responses where ever appropriate.
- Describe and Sketch the various switching circuits of Op-Amps and analyze its operations.
- Differentiate between various types of DACs and ADCs and evaluate the performance of each with neat circuit diagrams and assuming suitable inputs.

Modules	RBT Level
Module -1	
Operational Amplifier Fundamentals: Basic Op-amp circuit, Op-Amp parameters – Input and output voltage, CMRR and PSRR, offset voltages and currents, Input and output impedances, Slew rate and Frequency limitations. **OP-Amps as DC Amplifiers** – Biasing OP-amps, Direct coupled voltage followers, Non-inverting amplifiers, inverting amplifiers, Summing amplifiers, and Difference amplifiers. Interpretation of OP-amp LM741 & TL081 datasheet.**(Text1)**	**L1, L2,L3**
Module -2	
Op-Amps as AC Amplifiers: Capacitor coupled voltage follower, High input impedance – Capacitor coupled voltage follower, Capacitor coupled non inverting amplifiers, High input impedance – Capacitor coupled Non inverting amplifiers, Capacitor coupled inverting amplifiers, setting the upper cut-off frequency, Capacitor coupled difference amplifier. **OP-Amp Applications:** Voltage sources, current sources and current sinks, current amplifiers, instrumentation amplifier, precision rectifiers.**(Text1)**	**L1, L2,L3**
Module-3	
More Applications : Limiting circuits, Clamping circuits, Peak detectors, Sample and hold circuits, V to I and I to V converters, Differentiating Circuit, Integrator Circuit, Phase shift oscillator, Wien bridge oscillator, Crossing detectors**,** inverting Schmitt trigger. **(Text 1)** Log and antilog amplifiers, Multiplier and divider. **(Text2)**	**L1, L2,L3**

Module -4	
Active Filters: First order and second order active Low-pass and high pass filters, Bandpass Filter, Bandstop Filter. **(Text 1)** **Voltage Regulators:** Introduction, Series Op-amp regulator, IC voltage regulators. 723 general purpose regulators. **(Text 2)**	**L1, L2,L3**
Module -5	
Phase locked loop: Basic Principles, Phase detector/comparator, VCO. **DAC and ADC convertor**: DAC using R-2R, ADC using Successive approximation. **Other IC Application:** 555 timer, Basic timer circuit, 555 timer used as astable and monostable multivibrator. **(Text 2)**	**L1, L2,L3**

Course Outcomes: After studying this course, students will be able to:

- Explain Op-Amp circuit and parameters including CMRR, PSRR, Input & Output Impedances and Slew Rate.
- Design Op-Amp based Inverting, Non-inverting, Summing & Difference Amplifier, and AC Amplifiers including Voltage Follower.
- Test circuits of Op-Amp based Voltage/ Current Sources & Sinks, Current, Instrumentation and Precision Amplifiers.
- Test circuits of Op-Amp based linear and non-linear circuits comprising of limiting, clamping, Sample & Hold, Differentiator/ Integrator Circuits, Peak Detectors, Oscillators and Multiplier & Divider.
- Design first & second order Low Pass, High Pass, Band Pass, Band Stop Filters and Voltage Regulators using Op-Amps.
- Explain applications of linear ICs in phase detector, VCO, DAC, ADC and Timer.

Question paper pattern:

- The question paper will have ten questions.
- Each full Question consisting of 16 marks.
- There will be 2 full questions (with a maximum of Three sub questions) from each module.
- Each full question will have sub questions covering all the topics under a module.
- The students will have to answer 5 full questions, selecting one full question from each module.

Text Books:

1. "Operational Amplifiers and Linear IC's", David A. Bell, 2nd edition, PHI/Pearson, 2004. ISBN 978-81-203-2359-9.
2. "Linear Integrated Circuits", D. Roy Choudhury and Shail B. Jain, 4th edition, Reprint 2006, New Age International ISBN 978-81-224-3098-1.

Reference Books:

1. Ramakant A Gayakwad, “Op-Amps and Linear Integrated Circuits”, Pearson, 4th Ed, 2015. ISBN 81-7808-501-1.
2. B Somanathan Nair, “Linear Integrated Circuits: Analysis, Design & Applications,” Wiley India, 1st Edition, 2015.
3. James Cox, “Linear Electronics Circuits and Devices”, Cengage Learning, Indian Edition, 2008, ISBN-13: 978-07-668-3018-7.
4. Data Sheet: http://www.ti.com/lit/ds/symlink/tl081.pdf.

MICROPROCESSOR LABORATORY

[As per Choice Based Credit System (CBCS) scheme]

SEMESTER – IV (EC/TC)

Laboratory Code	15ECL47	IA Marks	20
Number of Lecture Hours/Week	01Hr Tutorial (Instructions) + 02 Hours Laboratory	Exam Marks	80
RBT Level	L1, L2, L3	Exam Hours	03

CREDITS – 02

Course objectives: This course will enable students to:

- Get familiarize with 8086 instructions and DOS 21H interrupts and function calls.
- Develop and test assembly language programs to use instructions of 8086.
- Get familiarize with interfacing of various peripheral devices with 8086 microprocessor for simple applications.

Laboratory Experiments:

1. Programs involving:

Data transfer instructions like:

i) Byte and word data transfer in different addressing Modes
ii) Block move (with and without overlap)
iii) Block interchange

2. Programs involving:

Arithmetic & logical operations like:

i) Addition and Subtraction of multi precision nos.
ii) Multiplication and Division of signed and unsigned Hexadecimal nos.
iii) ASCII adjustment instructions.
iv) Code conversions.

3. Programs involving:

Bit manipulation instructions like checking:

i) Whether given data is positive or negative
ii) Whether given data is odd or even
iii) Logical 1's and 0's in a given data
iv) 2 out 5 code
v) Bit wise and nibble wise palindrome

4. Programs involving:

Branch/ Loop instructions like

i) Arrays: addition/subtraction of N nos., Finding largest and smallest nos., Ascending and descending order.
ii) Two application programs using Procedures and Macros (Subroutines).

5. Programs involving

String manipulation like string transfer, string reversing, searching for a string.

6. Programs involving

Programs to use DOS interrupt INT 21h Function calls for Reading a Character from keyboard, Buffered Keyboard input, Display of character/ String on console.

7. Interfacing Experiments:

Experiments on interfacing 8086 with the following interfacing modules through DIO (Digital Input/Output - PCI bus compatible card / 8086 Trainer)

1. Matrix keyboard interfacing
2. Seven segment display interface
3. Logical controller interface
4. Stepper motor interface
5. ADC and DAC Interface (8 bit)
6. Light dependent resistor (LDR), Relay and Buzzer Interface to make light operated switches

Course Outcomes: On the completion of this laboratory course, the students will be able to:

- Write and execute 8086 assembly level programs to perform data transfer, arithmetic and logical operations.
- Understand assembler directives, branch, loop operations and DOS 21H Interrupts.
- Write and execute 8086 assembly level programs to sort and search elements in a given array.
- Perform string transfer, string reversing, searching a character in a string with string manipulation instructions of 8086.
- Utilize procedures and macros in programming 8086.
- Demonstrate the interfacing of 8086 with 7 segment display, matrix keyboard, logical controller, stepper motor, ADC, DAC, and LDR for simple applications.

Conduct of Practical Examination:

- All laboratory experiments are to be included for practical examination.
- For examination, one question from software and one question from hardware interfacing to be set.
- Students are allowed to pick one experiment from the lot.
- Change of experiment is allowed only once and Marks allotted to the procedure part to be made zero.

LINEAR ICS AND COMMUNICATION LAB

As per Choice Based Credit System (CBCS) scheme]

SEMESTER – IV (EC/TC)

Laboratory Code	15ECL48	IA Marks	20
Number of Lecture Hours/Week	01Hr Tutorial (Instructions) + 02 Hours Laboratory	Exam Marks	80
RBT Level	L1, L2, L3	Exam Hours	03
CREDITS – 02			

Course objectives: This laboratory course enables students to:

- Design, Demonstrate and Analyze instrumentation amplifier, filters, DAC, adder, differentiator and integrator circuits, using op-amp.
- Design, Demonstrate and Analyze multivibrators and oscillator circuits using Op-amp
- Design, Demonstrate and Analyze analog systems for AM, FM and Mixer operations.
- Design, Demonstrate and Analyze balance modulation and frequency synthesis.
- Demonstrate and Analyze pulse sampling and flat top sampling.

Laboratory Experiments:

1. Design an instrumentation amplifier of a differential mode gain of 'A' using three amplifiers.
2. Design of RC Phase shift and Wien's bridge oscillators using Op-amp.
3. Design active second order Butterworth low pass and high pass filters.
4. Design 4 bit R – 2R Op-Amp Digital to Analog Converter (i) using 4 bit binary input from toggle switches and (ii) by generating digital inputs using mod-16 counter.
5. Design Adder, Integrator and Differentiator using Op-Amp.
6. Design of Monostable and Astable Multivibrator using 555 Timer.
7. Demonstrate Pulse sampling, flat top sampling and reconstruction.
8. Amplitude modulation using transistor/FET (Generation and detection).
9. Frequency modulation using IC 8038/2206 and demodulation.
10. Design BJT/FET Mixer.
11. DSBSC generation using Balance Modulator IC 1496/1596.
12. Frequency synthesis using PLL.

Course Outcomes: This laboratory course enables students to:

- Illustrate the pulse and flat top sampling techniques using basic circuits.
- Demonstrate addition and integration using linear ICs, and 555 timer operations to generate signals/pulses.
- Demonstrate AM and FM operations and frequency synthesis.
- Design and illustrate the operation of instrumentation amplifier, LPF, HPF, DAC and oscillators using linear IC.

Conduct of Practical Examination:

- All laboratory experiments are to be included for practical examination.
- Students are allowed to pick one experiment from the lot.
- Change of experiment is allowed only once and Marks allotted to the procedure part to be made zero.

B.E E&C FIFTH SEMESTER SYLLABUS

MANAGEMENT AND ENTREPRENEURSHIP DEVELOPMENT

B.E., V Semester, EC/TC/EI/BM/ML

[As per Choice Based Credit System (CBCS) scheme]

Subject Code	15ES51	IA Marks	20
Number of Lecture Hours/Week	04	Exam Marks	80
Total Number of Lecture Hours	50 (10 Hours / Module)	Exam Hours	03
CREDITS – 04			

Course Objectives: This course will enable students to:

- Understand basic skills of Management
- Understand the need for Entrepreneurs and their skills
- Understand Project identification and Selection
- Identify the Management functions and Social responsibilities
- Distinguish between management and administration

Module-1	RBT Level
Management: Nature and Functions of Management – Importance, Definition, Management Functions, Levels of Management, Roles of Manager, Managerial Skills, Management & Administration, Management as a Science, Art & Profession (Selected topics of Chapter 1, Text 1). **Planning:** Planning-Nature, Importance, Types, Steps and Limitations of Planning; Decision Making – Meaning, Types and Steps in Decision Making(Selected topics from Chapters 4 & 5, Text 1).	L1, L2
Module-2	
Organizing and Staffing: Organization-Meaning, Characteristics, Process of Organizing, Principles of Organizing, Span of Management (meaning and importance only), Departmentalisation, Committees–Meaning, Types of Committees; Centralization Vs Decentralization of Authority and Responsibility; **Staffing**-Need and Importance**,** Recruitment and Selection Process (Selected topics from Chapters 7, 8 & 11,Text 1). **Directing and Controlling:** Meaning and Requirements of Effective Direction, Giving Orders; Motivation-Nature of Motivation, Motivation Theories (Maslow's Need-Hierarchy Theory and Herzberg's Two Factor Theory); Communication – Meaning, Importance and Purposes of Communication; Leadership-Meaning, Characteristics, Behavioural Approach of Leadership; Coordination-Meaning, Types, Techniques of Coordination; Controlling – Meaning, Need for Control System, Benefits of Control, Essentials of Effective Control System, Steps in Control Process (Selected topics from Chapters 15 to 18 and 9, Text 1).	L1, L2
Module-3	
Social Responsibilities of Business: Meaning of Social Responsibility, Social Responsibilities of Business towards Different Groups, Social Audit, Business Ethics and Corporate Governance (Selected topics from Chapter 3, Text 1).	L1, L2

Entrepreneurship: Definition of Entrepreneur, Importance of Entrepreneurship, concepts of Entrepreneurship, Characteristics of successful Entrepreneur, Classification of Entrepreneurs, Myths of Entrepreneurship, Entrepreneurial Development models, Entrepreneurial development cycle, Problems faced by Entrepreneurs and capacity building for Entrepreneurship (Selected topics from Chapter 2, Text 2).	
Module-4	
Modern Small Business Enterprises: Role of Small Scale Industries, Impact of Globalization and WTO on SSIs, Concepts and definitions of SSI Enterprises, Government policy and development of the Small Scale sector in India, Growth and Performance of Small Scale Industries in India, Sickness in SSI sector, Problems for Small Scale Industries, Ancillary Industry and Tiny Industry (Definition only)(Selected topics from Chapter1, Text 2). **Institutional Support for Business Enterprises:** Introduction, Policies & Schemes of Central Level Institutions, State Level Institutions (Selected topics from Chapter 4, Text 2).	L1, L2
Module-5	
Projects Management: AProject. Search for a Business idea**:** Introduction, Choosing an Idea, Selection of product, The Adoption process, Product Innovation, Product Planning and Development Strategy, Product Planning and Development Process. Concepts of Projects and Classification**:** Introduction, Meaning of Projects, Characteristics of a Project, Project Levels, Project Classification, Aspects of a Project, The project Cycle, Features and Phases of Project management, Project Management Processes. Project Identification**:** Feasibility Report, Project Feasibility Analysis. Project Formulation**:** Meaning, Steps in Project formulation, Sequential Stages of Project Formulation, Project Evaluation. **Project Design and Network Analysis:** Introduction, Importance of Network Analysis, Origin of PERT and CPM, Network, Network Techniques, Need for Network Techniques, Steps in PERT, CPM, Advantages, Limitations and Differences. (Selected topics from Chapters 16 to 20 of Unit 3, Text 3).	L1, L2, L3

Course Outcomes: After studying this course, students will be able to:

- Understand the fundamental concepts of Management and Entrepreneurship
- Select a best Entrepreneurship model for the required domain of establishment
- Describe the functions of Managers, Entrepreneurs and their social responsibilities
- Compare various types of Entrepreneurs
- Analyze the Institutional support by various state and central government agencies

Question paper pattern

- The question paper will have TEN questions.
- Each full question carries 16 marks.
- There will be two full questions (with a maximum of Three sub questions) from each module.
- Each full question will have sub questions covering all topics under a module.
- The students will have to answer 5 full questions, selecting one full question from each module.

Text Books:

1. Principles of Management – P.C Tripathi, P.N Reddy, McGraw Hill Education, 6th Edition, 2017. ISBN-13:978-93-5260-535-4.
2. Entrepreneurship Development Small Business Enterprises- Poornima M Charantimath, Pearson Education 2008, ISBN 978-81-7758-260-4.
3. Dynamics of Entrepreneurial Development and Management by Vasant Desai. HPH 2007, ISBN: 978-81-8488-801-2.

Reference Book:

Essentials of Management: An International, Innovation and Leadership perspective by Harold Koontz, Heinz Weihrich McGraw Hill Education, 10th Edition 2016. ISBN- 978-93-392-2286-4.

DIGITAL SIGNAL PROCESSING

B.E., V Semester, Electronics & Communication Engineering / Telecommunication Engineering

[As per Choice Based Credit System (CBCS) scheme]

Subject Code	15EC52	IA Marks	20
Number of Lecture Hours/Week	04	Exam Marks	80
Total Number of Lecture Hours	50 (10 Hours / Module)	Exam Hours	03
CREDITS – 04			

Course objectives: This course will enable students to

- Understand the frequency domain sampling and reconstruction of discrete time signals.
- Study the properties and the development of efficient algorithms for the computation of DFT.
- Realization of FIR and IIR filters in different structural forms.
- Learn the procedures to design of IIR filters from the analog filters using impulse invariance and bilinear transformation.
- Study the different windows used in the design of FIR filters and design appropriate filters based on the specifications.

Modules

Module-1	**RBT Level**
Discrete Fourier Transforms (DFT): Frequency domain sampling and reconstruction of discrete time signals. DFT as a linear transformation, its relationship with other transforms. Properties of DFT, multiplication of two DFTs- the circular convolution.	L1, L2
Module-2	
Additional DFT properties, use of DFT in linear filtering, overlap-save and overlap-add method. Fast-Fourier-Transform (FFT) algorithms: Direct computation of DFT, need for efficient computation of the DFT (FFT algorithms).	L1, L2, L3
Module-3	
Radix-2 FFT algorithm for the computation of DFT and IDFT–decimation-in-time and decimation-in-frequency algorithms. Goertzel algorithm, and chirp-z transform.	L1, L2, L3
Module-4	
Structure for IIR Systems: Direct form, Cascade form, Parallel form structures. IIR filter design: Characteristics of commonly used analog filter – Butterworth and Chebyshev filters, analog to analog frequency transformations. Design of IIR Filters from analog filter using Butterworth filter: Impulse invariance, Bilinear transformation.	L1, L2, L3
Module-5	
Structure for FIR Systems: Direct form, Linear Phase, Frequency sampling	L1, L2,

structure, Lattice structure. FIR filter design: Introduction to FIR filters, design of FIR filters using - Rectangular, Hamming, Hanning and Bartlett windows.	L3

Course Outcomes: After studying this course, students will be able to:

- Determine response of LTI systems using time domain and DFT techniques.
- Compute DFT of real and complex discrete time signals.
- Computation of DFT using FFT algorithms and linear filtering approach.
- Solve problems on digital filter design and realize using digital computations.

Question paper pattern:

- The question paper will have ten questions
- Each full question consists of 16 marks.
- There will be 2 full questions (with a maximum of three sub questions) from each module.
- Each full question will have sub questions covering all the topics under a module
- The students will have to answer 5 full questions, selecting one full question from each module.

Text Book:

Digital signal processing – Principles Algorithms & Applications, Proakis & Monalakis, Pearson education, 4th Edition, New Delhi, 2007.

Reference Books:

1. Discrete Time Signal Processing, Oppenheim & Schaffer, PHI, 2003.
2. Digital Signal Processing, S. K. Mitra, Tata Mc-Graw Hill, 3rd Edition, 2010.
3. Digital Signal Processing, Lee Tan: Elsevier publications, 2007.

Verilog HDL

B.E., V Semester, Electronics & Communication Engineering/ Telecommunication Engineering

[As per Choice Based Credit System (CBCS) scheme]

Subject Code	15EC53	IA Marks	20
Number of Lecture Hours/Week	04	Exam Marks	80
Total Number of Lecture Hours	50 (10 Hours / Module)	Exam Hours	03
CREDITS – 04			

Course objectives: This course will enable students to:

- Differentiate between Verilog and VHDL descriptions.
- Learn different Verilog HDL and VHDL constructs.
- Familiarize the different levels of abstraction in Verilog.
- Understand Verilog Tasks and Directives.
- Understand timing and delay Simulation.
- Learn VHDL at design levels of data flow, behavioral and structural for effective modeling of digital circuits.

Module-1	RBT Level
Overview of Digital Design with Verilog HDL Evolution of CAD, emergence of HDLs, typical HDL-flow, why Verilog HDL?, trends in HDLs. (Text1) **Hierarchical Modeling Concepts** Top-down and bottom-up design methodology, differences between modules and module instances, parts of a simulation, design block, stimulus block. (Text1)	L1, L2, L3
Module-2	
Basic Concepts Lexical conventions, data types, system tasks, compiler directives. (Text1) **Modules and Ports** Module definition, port declaration, connecting ports, hierarchical name referencing. (Text1)	L1, L2, L3
Module-3	
Gate-Level Modeling Modeling using basic Verilog gate primitives, description of and/or and buf/not type gates, rise, fall and turn-off delays, min, max, and typical delays. (Text1) **Dataflow Modeling** Continuous assignments, delay specification, expressions, operators, operands, operator types. (Text1)	L1, L2, L3
Module-4	
Behavioral Modeling Structured procedures, initial and always, blocking and non-blocking	L1, L2, L3

statements, delay control, generate statement, event control, conditional statements, Multiway branching, loops, sequential and parallel blocks. (Text1)	
Module-5	
Introduction to VHDL **Introduction:** Why use VHDL?, Shortcomings, Using VHDL for Design Synthesis, Design tool flow, Font conventions. **Entities and Architectures:** Introduction, A simple design, Design entities, Identifiers, Data objects, Data types, and Attributes. (Text 2)	L1, L2, L3

Course Outcomes: At the end of this course, students should be able to

- Write Verilog programs in gate, dataflow (RTL), behavioral and switch modeling levels of Abstraction.
- Write simple programs in VHDL in different styles.
- Design and verify the functionality of digital circuit/system using test benches.
- Identify the suitable Abstraction level for a particular digital design.
- Write the programs more effectively using Verilog tasks and directives.
- Perform timing and delay Simulation.

Question paper pattern:

- The question paper will have ten questions
- Each full question consists of 16 marks**.**
- There will be 2 full questions (with a maximum of three sub questions) from each module.
- Each full question will have sub questions covering all the topics under a module
- The students will have to answer 5 full questions, selecting one full question from each module

Text Books:

1. Samir Palnitkar, "**Verilog HDL: A Guide to Digital Design and Synthesis"**, Pearson Education, Second Edition.

2. Kevin Skahill, "**VHDL for Programmable Logic**", PHI/Pearson education, 2006.

Reference Books:

1. Donald E. Thomas, Philip R. Moorby, "The Verilog Hardware Description Language", Springer Science+Business Media, LLC, Fifth edition.
2. Michael D. Ciletti, "Advanced Digital Design with the Verilog HDL" Pearson (Prentice Hall), Second edition.
3. Padmanabhan, Tripura Sundari, "Design through Verilog HDL", Wiley, 2016 or earlier.

INFORMATION THEORY AND CODING

B.E., V Semester, Electronics & Communication Engineering / Telecommunication Engineering

[As per Choice Based Credit System (CBCS) scheme]

Subject Code	15EC54	IA Marks	20
Number of Lecture Hours/Week	04	Exam Marks	80
Total Number of Lecture Hours	50 (10 Hours / Module)	Exam Hours	03
CREDITS – 04			

Course Objectives: This course will enable students to:

- Understand the concept of Entropy, Rate of information and order of the source with reference to dependent and independent source.
- Study various source encoding algorithms.
- Model discrete & continuous communication channels.
- Study various error control coding algorithms.

Modules

Module-1	**RBT Level**
Information Theory: Introduction, Measure of information, Information content of message, Average Information content of symbols in Long Independent sequences, Average Information content of symbols in Long dependent sequences, Markov Statistical Model of Information Sources, Entropy and Information rate of Markoff Sources (Section 4.1, 4.2 of Text 1).	L1, L2, L3
Module-2	
Source Coding: Source coding theorem, Prefix Codes, Kraft McMillan Inequality property – KMI (Section 2.2 of Text 2). Encoding of the Source Output, Shannon's Encoding Algorithm (Sections 4.3, 4.3.1 of Text 1). Shannon Fano Encoding Algorithm, Huffman codes, Extended Huffman coding, Arithmetic Coding, Lempel – Ziv Algorithm (Sections 3.6, 3.7, 3.8, 3.10 of Text 3).	L1, L2, L3
Module-3	
Information Channels: Communication Channels (Section 4.4 of Text 1). Channel Models, Channel Matrix, Joint probabilty Matrix, Binary Symmetric Channel, System Entropies, Mutual Information, Channel Capacity, Channel Capacity of : Binary Symmetric Channel, Binary Erasure Channel, Muroga,s Theorem, Contineuos Channels (Sections 4.2, 4.3, 4.4, 4.6, 4.7 of Text 3).	L1, L2, L3
Module-4	

Error Control Coding: Introduction, Examples of Error control coding, methods of Controlling Errors, Types of Errors, types of Codes, Linear Block Codes: matrix description of Linear Block Codes, Error Detection and Error Correction Capabilities of Linear Block Codes, Single Error Correcting hamming Codes, Table lookup Decoding using Standard Array. **Binary Cyclic Codes:** Algebraic Structure of Cyclic Codes, Encoding using an (n-k) Bit Shift register, Syndrome Calculation, Error Detection and Correction (Sections 9.1, 9.2, 9.3, 9.3.1, 9.3.2, 9.3.3 of Text 1).	L1, L2, L3
Module-5	
Some Important Cyclic Codes: Golay Codes, BCH Codes(Section 8.4 – Article 5 of Text 2). **Convolution Codes**: Convolution Encoder, Time domain approach, Transform domain approach, Code Tree, Trellis and State Diagram, The Viterbi Algorithm) (Section 8.5 – Articles 1,2 and 3, 8.6- Article 1 of Text 2).	L1, L2, L3

Course Outcomes: At the end of the course the students will be able to:

- Explain concept of Dependent & Independent Source, measure of information, Entropy, Rate of Information and Order of a source
- Represent the information using Shannon Encoding, Shannon Fano, Prefix and Huffman Encoding Algorithms
- Model the continuous and discrete communication channels using input, output and joint probabilities
- Determine a codeword comprising of the check bits computed using Linear Block codes, cyclic codes & convolutional codes
- Design the encoding and decoding circuits for Linear Block codes, cyclic codes, convolutional codes, BCH and Golay codes.

Question paper pattern:

- The question paper will have ten questions
- Each full question consists of 16 marks.
- There will be 2 full questions (with a maximum of three sub questions) from each module.
- Each full question will have sub questions covering all the topics under a module
- The students will have to answer 5 full questions, selecting one full question from each module

Text Books:

1. Digital and analog communication systems, K. Sam Shanmugam, John Wiley India Pvt. Ltd, 1996.
2. Digital communication, Simon Haykin, John Wiley India Pvt. Ltd, 2008.
3. Information Theory and Coding, Muralidhar Kulkarni, K.S. Shivaprakasha, Wiley India Pvt. Ltd, 2015, ISBN:978-81-265-5305-1.

Reference Books:

1. ITC and Cryptography, Ranjan Bose, TMH, II edition, 2007
2. Principles of digital communication, J. Das, S. K. Mullick, P. K. Chatterjee, Wiley, 1986 - Technology & Engineering

3. Digital Communications – Fundamentals and Applications, Bernard Sklar, Second Edition, Pearson Education, 2016, ISBN: 9780134724058.
4. Information Theory and Coding, K.N.Haribhat, D.Ganesh Rao, Cengage Learning, 2017.

NANOELECTRONICS

B.E., V Semester, Electronics & Communication Engineering / Telecommunication Engineering

[As per Choice Based Credit System (CBCS) scheme]

Subject Code	15EC551	IA Marks	20
Number of Lecture Hours/Week	03	Exam Marks	80
Total Number of Lecture Hours	40 (8 Hours / Module)	Exam Hours	03
CREDITS – 03			

Course Objectives: This course will enable students to:

- Enhance basic engineering science and technical knowledge of nanoelectronics.
- Explain basics of top-down and bottom-up fabrication process, devices and systems.
- Describe technologies involved in modern day electronic devices.
- Know various nanostructures of carbon and the nature of the carbon bond itself.
- Learn the photo physical properties of sensor used in generating a signal.

Module-1	**RBT Level**
Introduction: Overview of nanoscience and engineering. Development milestones in microfabrication and electronic industry. Moore's law and continued miniaturization, Classification of Nanostructures, Electronic properties of atoms and solids: Isolated atom, Bonding between atoms, Giant molecular solids, Free electron models and energy bands, crystalline solids, Periodicity of crystal lattices, Electronic conduction, effects of nanometerlength scale, Fabrication methods: Top down processes, Bottom up processes methods for templating the growth of nanomaterials, ordering of nanosystems (Text 1).	L1, L2
Module-2	
Characterization: Classification, Microscopic techniques, Field ion microscopy, scanning probe techniques, diffraction techniques: bulk and surface diffraction techniques (Text 1). **Inorganic semiconductor nanostructures:** overview of semiconductor physics. Quantum confinement in semiconductor nanostructures: quantum wells, quantum wires, quantum dots, super-lattices, band offsets, electronic density of states (Text 1).	L1, L2
Module-3	
Fabrication techniques: requirements of ideal semiconductor, epitaxial growth of quantum wells, lithography and etching, cleaved-edge over growth, growth of vicinal substrates, strain induced dots and wires, electrostatically induced dots and wires, Quantum well width fluctuations, thermally annealed quantum wells, semiconductor nanocrystals, collidal quantum dots, self-assembly techniques.(Text 1). **Physical processes:** modulation doping, quantum hall effect, resonant tunneling, charging effects, ballistic carrier transport, Inter band absorption, intraband absorption, Light emission processes, phonon bottleneck, quantum confined stark effect, nonlinear effects, coherence and dephasing, characterization of semiconductor nanostructures: optical	L1, L2

electrical and structural (Text 1).	
Module-4	
Carbon Nanostructures: Carbon molecules, Carbon Clusters, Carbon Nanotubes, application of Carbon Nanotubes. (Text 2)	L1, L2
Module-5	
Nanosensors: Introduction, What is Sensor and Nanosensors?, What makes them Possible?, Order From Chaos, Characterization, Perception, Nanosensors Based On Quantum Size Effects, Electrochemical Sensors, Sensors Based On Physical Properties, Nanobiosensors, Smart dust Sensor for the future. (Text 3) **Applications:** Injection lasers, quantum cascade lasers, single-photon sources, biological tagging, optical memories, coulomb blockade devices, photonic structures, QWIP's, NEMS, MEMS (Text 1).	L1, L2
Course outcomes: After studying this course, students will be able to: • Know the principles behind Nanoscience engineering and Nanoelectronics. • Know the effect of particles size on mechanical, thermal, optical and electrical properties of nanomaterials. • Know the properties of carbon and carbon nanotubes and its applications. • Know the properties used for sensing and the use of smart dust sensors. • Apply the knowledge to prepare and characterize nanomaterials. • Analyse the process flow required to fabricate state-of-the-art transistor technology.	
Question paper pattern: • The question paper will have ten questions • Each full question consists of 16 marks. • There will be 2 full questions (with a maximum of three sub questions) from each module. • Each full question will have sub questions covering all the topics under a module • The students will have to answer 5 full questions, selecting one full question from each module	
Text Books: 1. Ed Robert Kelsall, Ian Hamley, Mark Geoghegan, "Nanoscale Science and Technology", John Wiley, 2007. 2. Charles P Poole, Jr, Frank J Owens, "Introduction to Nanotechnology", John Wiley, Copyright 2006, Reprint 2011. 3. T Pradeep, "Nano: The essentials-Understanding Nanoscience and Nanotechnology", TMH.	
Reference Book: Ed William A Goddard III, Donald W Brenner, Sergey E. Lyshevski, Gerald J Iafrate, "Hand Book of Nanoscience Engineering and Technology", CRC press, 2003.	

SWITCHING & FINITE AUTOMATA THEORY

B.E., V Semester, Electronics & Communication Engineering / Telecommunication Engineering

[As per Choice Based Credit System (CBCS) scheme]

Subject Code	15EC552	IA Marks	20
Number of Lecture Hours/Week	03	Exam Marks	80
Total Number of Lecture Hours	40 (8 Hours / Module)	Exam Hours	03
CREDITS – 03			

Course Objectives: This course will enable students to:

1. Understand the basics of threshold logic, effect of hazards on digital circuits and techniques of fault detection
2. Explain finite state model and minimization techniques
3. Know structure of sequential machines, and state identification
4. Understand the concept of fault detection experiments

Modules

Module-1	**RBT Level**
Threshold Logic: Introductory Concepts: Threshold element, capabilities and limitations of threshold logic, Elementary Properties, Synthesis of Threshold networks: Unate functions, Identification and realization of threshold functions, The map as a tool in synthesizing threshold networks. (Sections 7.1, 7.2 of Text)	L1, L2, L3
Module-2	
Reliable Design and Fault Diagnosis: Hazards, static hazards, Design of Hazard-free Switching Circuits, Fault detection in combinational circuits, Fault detection in combinational circuits: The faults, The Fault Table, Covering the fault table, Fault location experiments: Preset experiments, Adaptive experiments, Boolean differences, Fault detection by path sensitizing. (Sections 8.1, 8.2, 8.3, 8.4, 8.5 of Text)	L1, L2, L3
Module-3	
Sequential Machines: Capabilities, Minimization and Transformation The Finite state model and definitions, capabilities and limitations of finite state machines, State equivalence and machine minimization: k-equivalence, The minimization Procedure, Machine equivalence, Simplification of incompletely specified machines. (Section 10.1, 10.2, 10.3, 10.4 of Text)	L1, L2, L3
Module-4	
Structure of Sequential Machines: Introductory example, State assignment using partitions: closed partitions, The lattice of closed partitions, Reduction of output dependency, Input dependence and autonomous clocks, Covers and generation of closed partitions by state splitting: Covers, The implication graph, An application of state splitting to parallel decomposition. (Section 12.1, 12.2, 12.3, 12.4, 12.5, 12.6 of Text)	L1, L2, L3
Module-5	
State–Identification and Fault Detection Experiments: Experiments, Homing experiments, Distinguishing experiments, Machine identification,	L1, L2, L3

Fault detection experiments, Design of diagnosable machines, Second algorithm for the design of fault detection experiments. (Sections 13.1, 13.2, 13.3, 13.4, 13.5, 13.6, 13.7 of Text)	

Course outcomes: At the end of the course, students should be able to:

- Explain the concept of threshold logic
- Understand the effect of hazards on digital circuits and fault detection and analysis
- Define the concepts of finite state model
- Analyze the structure of sequential machine
- Explain methods of state identification and fault detection experiments

Question paper pattern:

- The question paper will have ten questions
- Each full question consists of 16 marks**.**
- There will be 2 full questions (with a maximum of three sub questions) from each module.
- Each full question will have sub questions covering all the topics under a module
- The students will have to answer 5 full questions, selecting one full question from each module

Text Book:

Switching and Finite Automata Theory – Zvi Kohavi, McGraw Hill, 2nd edition, 2010 ISBN: 0070993874.

Reference Books:

1. **Fault Tolerant And Fault Testable Hardware Design**-Parag K Lala, Prentice Hall Inc. 1985.
2. **Digital Circuits and Logic Design**.-Charles Roth Jr, Larry L. Kinney, Cengage Learning, 2014, ISBN: 978-1-133-62847-7.

OPERATING SYSTEM

B.E., V Semester, Electronics & Communication Engineering / Telecommunication Engineering

[As per Choice Based Credit System (CBCS) scheme]

Subject Code	15EC553	IA Marks	20
Number of Lecture Hours/Week	03	Exam Marks	80
Total Number of Lecture Hours	40 (8 Hours / Module)	Exam Hours	03
CREDITS – 03			

Course objectives: This course will enable students to:

- Understand the services provided by an operating system.
- Understand how processes are synchronized and scheduled.
- Understand different approaches of memory management and virtual memory management.
- Understand the structure and organization of the file system
- Understand interprocess communication and deadlock situations.

Module-1	**RBT Level**
Introduction to Operating Systems OS, Goals of an OS, Operation of an OS, Computational Structures, Resource allocation techniques, Efficiency, System Performance and User Convenience, Classes operating System, Batch processing, Multi programming, Time Sharing Systems, Real Time and distributed Operating Systems (Topics from Sections 1.2, 1.3, 2.2 to 2.8 of Text).	L1, L2
Module-2	
Process Management: OS View of Processes, PCB, Fundamental State Transitions, Threads, Kernel and User level Threads, Non-preemptive scheduling- FCFS and SRN, Preemptive Scheduling- RR and LCN, Long term, medium term and short term scheduling in a time sharing system (Topics from Sections 3.3, 3.3.1 to 3.3.4, 3.4, 3.4.1, 3.4.2 , 4.2, 4.3, 4.4.1 of Text).	L1, L2
Module-3	
Memory Management: Contiguous Memory allocation, Non-Contiguos Memory Allocation, Paging, Segmentation, Segmentation with paging, Virtual Memory Management, Demand Paging, Paging Hardware, VM handler, FIFO, LRU page replacement policies (Topics from Sections 5.5 to 5.9, 6.1 to 6.3, except Optimal policy and 6.3.1of Text).	L1, L2
Module-4	
File Systems: File systems and IOCS, File Operations, File Organizations, Directory structures, File Protection, Interface between File system and IOCS, Allocation of disk space, Implementing file access (Topics from Sections 7.1 to 7.8 of Text).	L1, L2, L3
Module-5	
Message Passing and Deadlocks: Overview of Message Passing, Implementing message passing, Mailboxes, Deadlocks, Deadlocks in resource allocation, Resource state modelling, Deadlock detection algorithm, Deadlock Prevention (Topics from Sections 10.1 to 10.3, 11.1 to	L1, L2, L3

11.5 of Text).	

Course outcomes: After studying this course, students will be able to:

- Explain the goals, structure, operation and types of operating systems.
- Apply scheduling techniques to find performance factors.
- Explain organization of file systems and IOCS.
- Apply suitable techniques for contiguous and non-contiguous memory allocation.
- Describe message passing, deadlock detection and prevention methods.

Question paper pattern:

- The question paper will have ten questions
- Each full question consists of 16 marks**.**
- There will be 2 full questions (with a maximum of three sub questions) from each module.
- Each full question will have sub questions covering all the topics under a module
- The students will have to answer 5 full questions, selecting one full question from each module

Text Book:

Operating Systems – A concept based approach, by Dhamdare, TMH, 2nd edition.

Reference Books:

1. Operating systems concepts, Silberschatz and Galvin, John Wiley India Pvt. Ltd, 5th edition,2001.
2. Operating system–internals and design system, William Stalling, Pearson Education, 4th ed, 2006.
3. Design of operating systems, Tannanbhaum, TMH, 2001.

ELECTRICAL ENGINEERING MATERIALS

B.E., V Semester, Electronics & Communication Engineering/ Telecommunication Engineering

[As per Choice Based Credit System (CBCS) scheme]

Subject Code	15EC554	IA Marks	20
Number of Lecture Hours/Week	03	Exam Marks	80
Total Number of Lecture Hours	40 (8 Hours/Module)	Exam Hours	03
CREDITS – 03			

Course Objectives: This course will enable students to:

- Understand the formation of bands in materials and the classification of materials on the basis of band theory
- Understand the classification of magnetic materials on the basis of their behavior in an external magnetizing field.
- Understand the characteristics and properties of conducting and superconducting materials
- Understand the electrical characteristics of the material to be considered on the basis of their uses.
- Classify electrical engineering materials into low and high resistance materials

Modules

Module-1	**RBT Level**
Band Theory of Solids: Introduction to free electron theory, Kroning-Penney Model, Explanation for Discontinuities in E vs. K curve, Formation of Solid Material, Formation of Band in Metals, Formation of Bands in Semiconductors and Insulating Materials, Classification of Materials on the Basis of Band Structure, Explanation for differences in the Electrical properties of different Materials. Important Characteristics of a Band Electron, Number of energy states per band, Explanation for Insulating and Metallic Behavior of Materials, Concept of Hole.	L1, L2
Module-2	
Magnetic Properties of Materials: Introduction, Origin of Magnetism, Basic Terms in Magnetism, Relation between Magnetic Permeability and Susceptibility, Classification of magnetic Materials, Characteristics of Diamagnetic Materials, Paramagnetic Materials, Ferromagnetic Materials, Ferrimagnetic Materials, Langevin's Theory of Diamagnetism, Explanation of Dia, Para and Ferromagnetism, Ampere's Lam in Dia, Para and Ferromagnetism, Hystersis and Hystersis loss, Langevin's Theory of paramagnetism, Modification in the Langevin's Theory, Anti-Ferromagnetism and Neel Temperature, Ferrimagnetic Materials, Properties of some important Magnetic Materials, Magentostriction and Magnetostrictive Materials, Hard and Soft Ferromagnetic Materials and their Applications.	L1, L2
Module-3	
Behavior of Dielectric Materials in AC and DC Fields: Introduction, Classification of Dielectric Materials at Microscopic level, Polar Dielectric Materials, Non-polar Dielectric Materials, Kinds of Polarizations, behavior of	L1, L2

dielectric materials, Three electric Vectors, Gauss's Law in a Dielectric, Electric Susceptibility and Static Dielectric constant, Effect of Dielectric medium upon capacitance, macroscopic electric field, Microscopic Electric field, temperature dependence of dielectric constant, polar dielectric in ac and dc fields, behavior of polar dielectric at high frequencies, Dielectric loss, Dielectric strength and Dielectric Breakdown, Various kinds of Dielectric Materials, Hysteresis in Ferroelectric Materials, Applications of Ferroelectric Materials in Devices.	
Module-4	
Conductivity of Metals and Superconductivity: Introduction, Ohm's law, Explanation for the dependence of electrical resistivity upon temperature, Free-electron theory of metals, Application of Lorentz-Drude free-electron theory, Effect of various parameters on Electrical Conductivity, Resistivity Ratio, Variation of resistivity of alloys with temperature, Thermal Conductivity of Materials, Heat produced in Current Carrying Conductor, Thermoelectric Effect, Thermoelectric Series, Seebeck's Experiment. Discovery of superconductivity, superconductivity and transition temperature, superconducting materials, explanation of superconductivity phenomenon, characteristics of superconductors, change in thermodynamic parameters in superconducting state, frequency dependence of superconductivity, current status of high temperature superconductors, practical applications of superconductors.	L1, L2
Module-5	
Electrical Conducting and Insulating materials: Introduction, Classification of conducting materials, difference in properties of Hard-Drawn and Annealed copper, standard conductors, comparison between some popular Low-Resistivity Materials, Low-Resistivity Copper Alloys, Electrical contact materials and their selection, classification of contact materials, Materials for Lamp Filaments, Preparation of Tungsten Filaments. Insulating gases, Liquids and solids and their characteristics, Selection of the insulating material, other important properties of Insulating materials, Thermal characteristics, chemical properties of Insulating materials, classification of Insulating materials on the basis of structure.	L1, L2

Course Outcomes: At the end of the course, students will be able to

- Understand the various kinds of materials and their applications in ac and dc fields.
- Understand the conductivity of superconductivity of materials.
- Explain the electrical properties of different materials and metallic behavior of materials on the basis of band theory.
- Explain the properties and applications of all kind of magnetic materials.
- Explain the properties of electrical conducting and insulating materials.
- Assess a variety of approaches in developing new materials with enhanced performance to replace existing materials.

Question paper pattern:

- The question paper will have ten questions

- Each full question consists of 16 marks.
- There will be 2 full questions (with a maximum of three sub questions) from each module.
- Each full question will have sub questions covering all the topics under a module
- The students will have to answer 5 full questions, selecting one full question from each module

Text Book:

R K Shukla and Archana Singh, "Electrical Engineering Materials" McGraw Hill, 2012, ISBN: 978-1-25-90062-03.

Reference Books:

1. S.O. KASAP, "Electronic Materials and Devices" 3rd edition, McGraw Hill, 2014, ISBN-978-0-07-064820-3.
2. C.S.Indulkar and S. Thiruvengadam, S., "An Introduction to Electrical Engineering Materials", ISBN-9788121906661.

MSP430 MICROCONTROLLER

B.E., V Semester, Electronics & Communication Engineering

[As per Choice Based Credit System (CBCS) scheme]

Subject Code	15EC555	IA Marks	20
Number of Lecture Hours/Week	03	Exam Marks	80
Total Number of Lecture Hours	40 (8 Hours / Module)	Exam Hours	03
CREDITS – 03			

Course objectives: This course will enable students to:

- Understand the architectural features and instruction set of 16 bit microcontroller MSP430.
- Program MSP430 using the various instructions for different applications.
- Understand the functions of the various peripherals which are interfaced with MSP430.
- Describe the power saving modes in MSP430.
- Explain the low power applications using MSP430.

Module-1	RBT Level
MSP430 Architecture: Introduction –Where does the MSP430 fit, The outside view, The inside view-Functional block diagram, Memory, Central Processing Unit, Memory Mapped Input and Output, Clock Generator, Exceptions: Interrupts and Resets, MSP430 family. (Text: Ch1- 1.3 to 1.7, Ch2- 2.1 to 2.7, Ch5- 5.1, 5.7 up to 5.7.1)	L1, L2
Module-2	
Addressing Modes & Instruction Set-Addressing Modes, Instruction set**,** Constant Generator and Emulated Instructions, Program Examples. (Text: Ch5- 5.2 to 5.5)	L1, L2, L3
Module-3	
Clock System, Interrupts and Operating Modes-Clock System, Interrupts, What happens when an interrupted is requested, Interrupt Service Routines, Low Power Modes of Operation, Watchdog Timer, Basic Timer1, Real Time Clock, Timer-A: Timer Block, Capture/Compare Channels, Interrupts from Timer-A. (Text: Ch5 - 5.8 upto 5.8.4, Ch 6-6.6 to 6.8, 6.10, Ch8 -8.1, 8.2, 8.3)	L1, L2
Module-4	
Analog Input-Output and PWM - Comparator-A, ADC10, ADC12, Sigma-Delta ADC, Internal Operational Amplifiers, DAC, Edge Aligned PWM, Simple PWM, Design of PWM. LCD interfacing. (Text: Ch9 – 9.1 up to 9.1.2, 9.4, 9.5 up to 9.5.1, 9.7, 9.8 up to 9.8.1, 9.11.5, 9.12 (without 9.12.1), 8.6.2 to 8.6.4)	L1, L2
Module-5	

Digital Input-Output and Serial Communication: Parallel Ports, Lighting LEDs, Flashing LEDs, Read Input from a Switch, Toggle the LED state by pressing the push button, LCD interfacing. Asynchronous Serial Communication, Asynchronous Communication with USCI_A, Communications, Peripherals in MSP430, Serial Peripheral Interface. (Text: Selected topics from Ch4 & Ch7 and Ch7- 7.1, Ch10 – 10.1, 10.2, and 10.12)	L1, L2, L3
Course outcomes: After studying this course, students will be able to: • Understand the architectural features and instruction set of 16 bit microcontroller MSP430. • Develop programs using the various instructions of MSP430 for different applications. • Understand the functions of the various peripherals which are interfaced with MSP430 microcontroller. • Describe the power saving modes in MSP430. • Explain the low power applications using MSP430 microcontroller.	

Evaluation of Internal Assessment Marks:

It is suggested that at least a few simple programs to be executed by students using any evaluation board of MSP430 for better understanding of the course. This activity can be considered for the evaluation of 5 marks out of 20 Internal assessment marks, reserved for the other activities.

Question paper pattern:

- The question paper will have ten questions
- Each full question consists of 16 marks.
- There will be 2 full questions (with a maximum of three sub questions) from each module.
- Each full question will have sub questions covering all the topics under a module
- The students will have to answer 5 full questions, selecting one full question from each module

Text Book:

John H Davies, MSP430 Microcontroller Basics, Newnes Publications, Elsevier, 2008.

References:

1. Chris Nagy, Embedded Systems Design using TI MSP430 Series, Newnes Publications, Elsevier, 2003.
2. User Guide from Texas Instruments.

DSP Lab

B.E., V Semester, EC/TC

[As per Choice Based Credit System (CBCS) scheme]

Subject Code	15ECL57	IA Marks	20
Number of Lecture Hours/Week	01Hr Tutorial (Instructions) + 02 Hours Laboratory=03	Exam Marks	80
RBT Levels	L1, L2, L3	Exam Hours	03

CREDITS – 02

Course objectives: This course will enable students to

- Simulate discrete time signals and verification of sampling theorem.
- Compute the DFT for a discrete signal and verification of its properties using MATLAB.
- Find solution to the difference equations and computation of convolution and correlation along with the verification of properties.
- Compute and display the filtering operations and compare with the theoretical values.
- Implement the DSP computations on DSP hardware and verify the result.

Laboratory Experiments

Following Experiments to be done using MATLAB / SCILAB / OCTAVE or equivalent:

1. Verification of sampling theorem.
2. Linear and circular convolution of two given sequences, Commutative, distributive and associative property of convolution.
3. Auto and cross correlation of two sequences and verification of their properties
4. Solving a given difference equation.
5. Computation of N point DFT of a given sequence and to plot magnitude and phase spectrum (using DFT equation and verify it by built-in routine).
6. (i) Verification of DFT properties (like Linearity and Parseval's theorem, etc.) (ii) DFT computation of square pulse and Sinc function etc.
7. Design and implementation of FIR filter to meet given specifications (using different window techniques).
8. Design and implementation of IIR filter to meet given specifications.

Following Experiments to be done using DSP kit

9. Linear convolution of two sequences
10. Circular convolution of two sequences
11. N-point DFT of a given sequence
12. Impulse response of first order and second order system
13. Implementation of FIR filter

Course outcomes: On the completion of this laboratory course, the students will be able to:

- Understand the concepts of analog to digital conversion of signals and frequency domain sampling of signals.

- Modelling of discrete time signals and systems and verification of its properties and results.
- Implementation of discrete computations using DSP processor and verify the results.
- Realize the digital filters using a simulation tool and a DSP processor and verify the frequency and phase response.

Conduct of Practical Examination:

1. All laboratory experiments are to be included for practical examination.
2. Strictly follow the instructions as printed on the cover page of answer script for breakup of marks.
3. Change of experiment is allowed only once and Marks allotted to the procedure part to be made zero.

HDL Lab

B.E., V Semester, EC/TC

[As per Choice Based Credit System (CBCS) scheme]

Subject Code	15ECL58	IA Marks	20
Number of Lecture Hours/Week	01 Hr Tutorial (Instructions) + 02 Hours Laboratory = 03	Exam Marks	80
RBT Levels	L1, L2, L3	Exam Hours	03

CREDITS – 02

Course objectives: This course will enable students to:

- Familiarize with the CAD tool to write HDL programs.
- Understand simulation and synthesis of digital design.
- Program FPGAs/CPLDs to synthesise the digital designs.
- Interface hardware to programmable ICs through I/O ports.
- Choose either Verilog or VHDL for a given Abstraction level.

Note: Programming can be done using any compiler. Download the programs on a FPGA/CPLD boards such as Apex/Acex/Max/Spartan/Sinfi or equivalent and performance testing may be done using 32 channel pattern generator and logic analyzer apart from verification by simulation with tools such as Altera/Modelsim or equivalent.

Laboratory Experiments

Part–A: PROGRAMMING

1. Write Verilog code to realize all the logic gates
2. Write a Verilog program for the following combinational designs
   a. 2 to 4 decoder
   b. 8 to 3 (encoder without priority & with priority)
   c. 8 to 1 multiplexer.
   d. 4 bit binary to gray converter
   e. Multiplexer, de-multiplexer, comparator.
3. Write a VHDL and Verilog code to describe the functions of a Full Adder using three modeling styles.
4. Write a Verilog code to model 32 bit ALU using the schematic diagram shown below

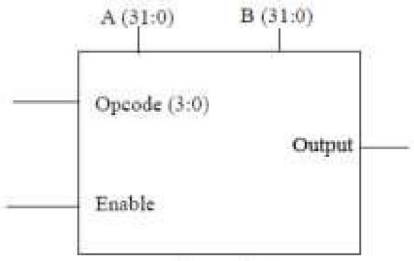

- ALU should use combinational logic to calculate an output based on the four bit op-code input.
- ALU should pass the result to the out bus when enable line in high, and tri-state the out bus when the enable line is low.

- ALU should decode the 4 bit op-code according to the example given below.

OPCODE	ALU Operation
1.	A+B
2.	A-B
3.	A Complement
4.	A*B
5.	A AND B
6.	A OR B
7.	A NAND B
8.	A XOR B

5. Develop the Verilog code for the following flip-flops, SR, D, JK and T.
6. Design a 4 bit binary, BCD counters (Synchronous reset and Asynchronous reset) and "any sequence" counters, using Verilog code.

Part–B: INTERFACING (at least four of the following must be covered using VHDL/Verilog)

1. Write HDL code to display messages on an alpha numeric LCD display.
2. Write HDL code to interface Hex key pad and display the key code on seven segment display.
3. Write HDL code to control speed, direction of DC and Stepper motor.
4. Write HDL code to accept Analog signal, Temperature sensor and display the data on LCD or Seven segment display.
5. Write HDL code to generate different waveforms (Sine, Square, Triangle, Ramp etc.,) using DAC - change the frequency.
6. Write HDL code to simulate Elevator operation.

Course Outcomes: At the end of this course, students should be able to:

- Write the Verilog/VHDL programs to simulate Combinational circuits in Dataflow, Behavioral and Gate level Abstractions.
- Describe sequential circuits like flip flops and counters in Behavioral description and obtain simulation waveforms.
- Synthesize Combinational and Sequential circuits on programmable ICs and test the hardware.
- Interface the hardware to the programmable chips and obtain the required output.

Conduct of Practical Examination:

1. All laboratory experiments are to be included for practical examination.
2. Strictly follow the instructions as printed on the cover page of answer script for breakup of marks.
3. Change of experiment is allowed only once and Marks allotted to the procedure part to be made zero.

5th Semester Open Electives Syllabus for the Courses offered by EC/TC Board

Automotive Electronics

B.E V Semester (Open Elective)

[As per Choice Based Credit System (CBCS) scheme

Subject Code	15EC561	IA Marks	20
Number of Lecture Hours/Week	03	Exam Marks	80
Total Number of Lecture Hours	40(08 Hrs per Module)	Exam Hours	03

CREDITS – 03

Course objectives: This course will enable students to:

- Understand the basics of automobile dynamics and design electronics to complement those features.
- Design and implement the electronics that attribute the reliability, safety, and smartness to the automobiles, providing add-on comforts.

Module-1	**RBT Level**
Automotive Fundamentals Overview – Evolution of Automotive Electronics, Automobile Physical Configuration, Survey of Major Automotive Systems, The Engine – Engine Block, Cylinder Head, Four Stroke Cycle, Engine Control, Ignition System - Spark plug, High voltage circuit and distribution, Spark pulse generation, Ignition Timing, Diesel Engine, Drive Train - Transmission, Drive Shaft, Differential, Suspension, Brakes, Steering System (Text 1: Chapter1), Starter Battery –Operating principle: (Text 2: Pg. 407-410) (4 hours) **The Basics of Electronic Engine Control –** Motivation for Electronic Engine Control – Exhaust Emissions, Fuel Economy, Concept of an Electronic Engine control system, Definition of General terms, Definition of Engine performance terms, Engine mapping, Effect of Air/Fuel ratio, spark timing and EGR on performance, Control Strategy, Electronic Fuel control system, Analysis of intake manifold pressure, Electronic Ignition. (Text 1: Chapter 5) (4 hours)	L1, L2
Module-2	

Automotive Control System applications of Sensors and Actuators – Typical Electronic Engine Control System, Variables to be measured (Text 1: Chapter 6) (1 hour) **Automotive Sensors** – Airflow rate sensor, Strain Gauge MAP sensor, Engine Crankshaft Angular Position Sensor, Magnetic Reluctance Position Sensor, Hall effect Position Sensor, Shielded Field Sensor, Optical Crankshaft Position Sensor, Throttle Angle Sensor (TAS), Engine Coolant Temperature (ECT) Sensor, Exhaust Gas Oxygen (O2/EGO) Lambda Sensors, Piezoelectric Knock Sensor. (Text 1: Chapter 6) (5 hours) **Automotive Actuators –** Solenoid, Fuel Injector, EGR Actuator, Ignition System (Text 1: Chapter 6) (2 hours)	L1, L2
Module-3	
Digital Engine Control Systems – Digital Engine control features, Control modes for fuel Control (Seven Modes), EGR Control, Electronic Ignition Control - Closed loop Ignition timing, Spark Advance Correction Scheme, Integrated Engine Control System - Secondary Air Management, Evaporative Emissions Canister Purge, Automatic System Adjustment, System Diagnostics. (Text 1: Chapter 7) (6 hours) **Control Units –** Operating conditions, Design, Data processing, Programming, Digital modules in the Control unit, Control unit software. (Text 2: Pg. 196-207) (2 hours)	L1, L2
Module-4	
Automotive Networking –Bus Systems – Classification, Applications in the vehicle, Coupling of networks, Examples of networked vehicles (Text 2: Pg. 85-91), Buses - CAN Bus, LIN Bus, MOST Bus, Bluetooth, Flex Ray, Diagnostic Interfaces. (Text 2: Pg. 92-151) (6 hours) **Vehicle Motion Control** – Typical Cruise Control System, Digital Cruise Control System, Digital Speed Sensor, Throttle Actuator, Digital Cruise Control configuration, Cruise Control Electronics (Digital only), Antilock Brake System (ABS) (Text 1: Chapter 8) (2 hours)	L1, L2
Module-5	
Automotive Diagnostics–Timing Light, Engine Analyzer, On-board diagnostics, Off-board diagnostics, Expert Systems, Occupant Protection Systems – Accelerometer based Air Bag systems. (Text 1: Chapter 10) (2 hours) **Future Automotive Electronic Systems** – Alternative Fuel Engines, Electric and Hybrid vehicles, Fuel cell powered cars, Collision Avoidance Radar warning Systems, Low tire pressure warning system, Heads Up display, Speech Synthesis, Navigation – Navigation Sensors - Radio Navigation, Signpost navigation, dead reckoning navigation, Voice Recognition Cell Phone dialing, Advanced Cruise Control, Stability Augmentation, Automatic driving Control (Text 1: Chapter 11) (6 hours)	L1, L2, L3

Course Outcomes: At the end of the course, students will be able to:

- Acquire an overview of automotive components, subsystems, and basics of Electronic Engine Control in today's automotive industry.
- Use available automotive sensors and actuators while interfacing with microcontrollers / microprocessors during automotive system design.
- Understand the networking of various modules in automotive systems, communication protocols and diagnostics of the sub systems.
- Design and implement the electronics that attribute the reliability, safety, and smartness to the automobiles, providing add-on comforts and get fair idea on future Automotive Electronic Systems.

Question paper pattern:

- The question paper will have ten questions.
- Each full Question consisting of 16 marks
- There will be 2 full questions (with a maximum of three sub questions) from each module.
- Each full question will have sub questions covering all the topics under a module.
- The students will have to answer 5 full questions, selecting one full question from each module.

Text Books:

1. William B. Ribbens, "Understanding Automotive Electronics", 6th Edition, Elsevier Publishing.
2. Robert Bosch Gmbh (Ed.) Bosch Automotive Electrics and Automotive Electronics Systems and Components, Networking and Hybrid Drive, 5th edition, John Wiley& Sons Inc., 2007.

Object Oriented Programming Using C++

B.E. V Semester (Open Elective)

[As per Choice Based Credit System (CBCS)scheme]

Subject Code	15EC562	IA Marks	20
Number of Lecture Hours/Week	03	Exam Marks	80
Total Number of Lecture Hours	40 (08 Hrs/ Module	Exam Hours	03

CREDITS – 03

Course objectives: This course will enable students to:

- Define Encapsulation, Inheritance and Polymorphism.
- Solve the problem with object oriented approach.
- Analyze the problem statement and build object oriented system model.
- Describe the characters and behavior of the objects that comprise a system.
- Explain function overloading, operator overloading and virtual functions.
- Discuss the advantages of object oriented programming over procedure oriented programming.

Module -1	**RBT Level**
Beginning with C++ and its features: What is C++?, Applications and structure of C++ program, Different Data types, Variables, Different Operators, expressions, operator overloading and control structures in C++ (Topics from Ch -2,3 of Text).	L1, L2
Module -2	
Functions, classes and Objects: Functions, Inline function, function overloading, friend and virtual functions, Specifying a class, C++ program with a class, arrays within a class, memory allocation to objects, array of objects, members, pointers to members and member functions (Selected Topics from Chap-4,5 of Text).	L1, L2, L3
Module -3	
Constructors, Destructors and Operator overloading: Constructors, Multiple constructors in a class, Copy constructor, Dynamic constructor, Destructors, Defining operator overloading, Overloading Unary and binary operators, Manipulation of strings using operators (Selected topics from Chap-6, 7 of Text).	L1, L2, L3
Module -4	
Inheritance, Pointers, Virtual Functions, Polymorphism: Derived Classes, Single, multilevel, multiple inheritance, Pointers to objects and derived classes, this pointer, Virtual and pure virtual functions (Selected topics from Chap-8,9 of Text).	L1, L2, L3

Module -5	
Streams and Working with files: C++ streams and stream classes, formatted and unformatted I/O operations, Output with manipulators, Classes for file stream operations, opening and closing a file, EOF (Selected topics from Chap-10, 11 of Text).	L1, L2, L3

Course Outcomes: At the end of the course, students will be able to:

- Explain the basics of Object Oriented Programming concepts.
- Apply the object initialization and destroy concept using constructors and destructors.
- Apply the concept of polymorphism to implement compile time polymorphism in programs by using overloading methods and operators.
- Use the concept of inheritance to reduce the length of code and evaluate the usefulness.
- Apply the concept of run time polymorphism by using virtual functions, overriding functions and abstract class in programs.
- Use I/O operations and file streams in programs.

Question paper pattern:

- The question paper will have ten questions.
- Each full Question consisting of 16 marks
- There will be 2 full questions (with a maximum of Three sub questions) from each module.
- Each full question will have sub questions covering all the topics under a module.
- The students will have to answer 5 full questions, selecting one full question from each module.

Text Book:

Object Oriented Programming with C++, E.Balaguruswamy, TMH, 6th Edition, 2013.

Reference Book:

Object Oriented Programming using C++, Robert Lafore, Galgotia publication 2010.

8051 MICROCONTROLLER

B.E., V Semester (Open Elective)

[As per Choice Based Credit System (CBCS) scheme]

Subject Code	15EC563	IA Marks	20
Number of Lecture Hours/Week	03	Exam Marks	80
Total Number of Lecture Hours	40 (08 Hrs/ Module)	Exam Hours	03

CREDITS – 03

Course objectives: This course will enable students to:

- Understand the difference between a Microprocessor and a Microcontroller and embedded microcontrollers.
- Familiarize the basic architecture of 8051 microcontroller.
- Program 8051microprocessor using Assembly Level Language and C.
- Understand the interrupt system of 8051 and the use of interrupts.
- Understand the operation and use of inbuilt Timers/Counters and Serial port of 8051.
- Interface 8051 to external memory and I/O devices using its I/O ports.

Module -1	**RBT Level**
8051 Microcontroller: Microprocessor Vs Microcontroller, Embedded Systems, Embedded Microcontrollers, 8051 Architecture- Registers, Pin diagram, I/O ports functions, Internal Memory organization. External Memory (ROM & RAM) interfacing.	L1, L2
Module -2	
8051 Instruction Set: Addressing Modes, Data Transfer instructions, Arithmetic instructions, Logical instructions, Branch instructions, Bit manipulation instructions. Simple Assembly language program examples (without loops) to use these instructions.	L1, L2
Module -3	
8051 Stack, I/O Port Interfacing and Programming: 8051 Stack, Stack and Subroutine instructions. Assembly language program examples on subroutine and involving loops - Delay subroutine, Factorial of an 8 bit number (result maximum 8 bit), Block move without overlap, Addition of N 8 bit numbers, Picking smallest/largest of N 8 bit numbers. Interfacing simple switch and LED to I/O ports to switch on/off LED with respect to switch status.	L1, L2, L3
Module -4	
8051 Timers and Serial Port: 8051 Timers and Counters – Operation and Assembly language programming to generate a pulse	L1, L2, L3

using Mode-1 and a square wave using Mode-2 on a port pin. 8051 Serial Communication- Basics of Serial Data Communication, RS-232 standard, 9 pin RS232 signals, Simple Serial Port programming in Assembly and C to transmit a message and to receive data serially.	
Module -5	
8051 Interrupts and Interfacing Applications: 8051 Interrupts. 8051 Assembly language programming to generate an external interrupt using a switch, 8051 C programming to generate a square waveform on a port pin using a Timer interrupt. Interfacing 8051 to ADC-0804, LCD and Stepper motor and their 8051 Assembly language interfacing programming.	L1, L2, L3

Evaluation of Internal Assessment Marks:

It is suggested that at least a few simple programs to be executed by students using a simulation software or an 8051 microcontroller kit for better understanding of the course. This activity can be considered for the evaluation of 5 marks out of 20 Internal assessment marks, reserved for the other activities.

Course outcomes: At the end of the course, students will be able to:

- Explain the difference between Microprocessors & Microcontrollers, Architecture of 8051 Microcontroller, Interfacing of 8051 to external memory and Instruction set of 8051.
- Write 8051 Assembly level programs using 8051 instruction set.
- Explain the Interrupt system, operation of Timers/Counters and Serial port of 8051.
- Write 8051 Assembly language program to generate timings and waveforms using 8051 timers, to send & receive serial data using 8051 serial port and to generate an external interrupt using a switch.
- Write 8051 C programs to generate square wave on 8051 I/O port pin using interrupt and to send & receive serial data using 8051 serial port.
- Interface simple switches, simple LEDs, ADC 0804, LCD and Stepper Motor to 8051 using 8051 I/O ports.

Question paper pattern:

- The question paper will have ten questions.
- Each full Question consisting of 16 marks
- There will be 2 full questions (with a maximum of Three sub questions) from each module.
- Each full question will have sub questions covering all the topics under a module.
- The students will have to answer 5 full questions, selecting one full question from each module.

TEXT BOOKS:

1. **"The 8051 Microcontroller and Embedded Systems – using assembly and C ",** Muhammad Ali Mazidi and Janice Gillespie Mazidi and Rollin D. McKinlay; PHI, 2006 / Pearson, 2006.

2. **"The 8051 Microcontroller",** Kenneth J. Ayala, 3rd Edition, Thomson/Cengage Learning.

REFERENCE BOOKS:

1. **"The 8051 Microcontroller Based Embedded Systems",** Manish K Patel, McGraw Hill, 2014, ISBN: 978-93-329-0125-4.
2. **"Microcontrollers: Architecture, Programming, Interfacing and System Design",** Raj Kamal, Pearson Education, 2005.

B.E E&C SIXTH SEMESTER SYLLABUS

DIGITAL COMMUNICATION

B.E., VI Semester, Electronics & Communication Engineering/ Telecommunication Engineering

[As per Choice Based Credit System (CBCS) scheme]

Subject Code	15EC61	IA Marks	20
Number of Lecture Hours/Week	04	Exam Marks	80
Total Number of Lecture Hours	50 (10 Hours/Module)	Exam Hours	03
CREDITS – 04			

Course Objectives: The objectives of the course is to enable students to:

- Understand the mathematical representation of signal, symbol, noise and channels.
- Apply the concept of signal conversion to symbols and signal processing to symbols in transmitter and receiver functional blocks.
- Compute performance issues and parameters for symbol processing and recovery in ideal and corrupted channel conditions.
- Compute performance parameters and mitigate for these parameters in corrupted and distorted channel conditions.

Module-1	RBT Level
Bandpass Signal to Equivalent Lowpass: Hilbert Transform, Pre-envelopes, Complex envelopes, Canonical representation of bandpass signals, Complex low pass representation of bandpass systems, Complex representation of band pass signals and systems (Text 1: 2.8, 2.9, 2.10, 2.11, 2.12, 2.13). **Line codes:** Unipolar, Polar, Bipolar (AMI) and Manchester code and their power spectral densities (Text 1: Ch 6.10). Overview of HDB3, B3ZS, B6ZS (Ref. 1: 7.2)	L1, L2, L3
Module-2	
Signaling over AWGN Channels- Introduction, Geometric representation of signals, Gram-Schmidt Orthogonalization procedure, Conversion of the continuous AWGN channel into a vector channel, Optimum receivers using coherent detection: ML Decoding, Correlation receiver, matched filter receiver (Text 1: 7.1, 7.2, 7.3, 7.4).	L1, L2, L3
Module-3	
Digital Modulation Techniques: Phase shift Keying techniques using coherent detection: generation, detection and error probabilities of BPSK and QPSK, M–ary PSK, M–ary QAM (Relevant topics in Text 1 of 7.6, 7.7). Frequency shift keying techniques using Coherent detection: BFSK	

generation, detection and error probability (Relevant topics in Text 1 of 7.8). Non coherent orthogonal modulation techniques: BFSK, DPSK Symbol representation, Block diagrams treatment of Transmitter and Receiver, Probability of error (without derivation of probability of error equation) (Text 1: 7.11, 7.12. 7.13).	
Module-4	
Communication through Band Limited Channels: Digital Transmission through Band limited channels: Digital PAM Transmission through Band limited Channels, Signal design for Band limited Channels: Design of band limited signals for zero ISI–The Nyquist Criterion (statement only), Design of band limited signals with controlled ISI-Partial Response signals, Probability of error for detection of Digital PAM: Probability of error for detection of Digital PAM with Zero ISI, Symbol–by–Symbol detection of data with controlled ISI (Text 2: 9.1, 9.2, 9.3.1, 9.3.2). Channel Equalization: Linear Equalizers (ZFE, MMSE), Adaptive Equalizers (Text 2: 9.4.2).	L1, L2, L3
Module-5	
Principles of Spread Spectrum: Spread Spectrum Communication Systems: Model of a Spread Spectrum Digital Communication System, Direct Sequence Spread Spectrum Systems, Effect of De-spreading on a narrowband Interference, Probability of error (statement only), Some applications of DS Spread Spectrum Signals, Generation of PN Sequences, Frequency Hopped Spread Spectrum, CDMA based on IS-95 (Text 2: 11.3.1, 11.3.2, 11.3.3, 11.3.4, 11.3.5, 11.4.2).	L1, L2, L3
Course Outcomes: At the end of the course, the students will be able to: • Associate and apply the concepts of Bandpass sampling to well specified signals and channels. • Analyze and compute performance parameters and transfer rates for low pas and bandpass symbol under ideal and corrupted non band limited channels. • Test and validate symbol processing and performance parameters at the receiver under ideal and corrupted bandlimited channels. • Demonstrate by simulation and emulation that bandpass signals subjected to corrupted and distorted symbols in a bandlimited channel, can be demodulated and estimated at receiver to meet specified performance criteria.	
Question paper pattern: • The question paper will have ten questions • Each full question consists of 16 marks. • There will be 2 full questions (with a maximum of Three sub questions) from each module. • Each full question will have sub questions covering all the topics under a module • The students will have to answer 5 full questions, selecting one full question from each module	
Text Books:	

1. Simon Haykin, “Digital Communication Systems”, John Wiley & sons, First Edition, 2014, ISBN 978-0-471-64735-5.
2. John G Proakis and Masoud Salehi, “Fundamentals of Communication Systems”, 2014 Edition, Pearson Education, ISBN 978-8-131-70573-5.

Reference Books:

1. B.P.Lathi and Zhi Ding, “Modern Digital and Analog communication Systems”, Oxford University Press, 4th Edition, 2010, ISBN: 978-0-198-07380-2.
2. Ian A Glover and Peter M Grant, “Digital Communications”, Pearson Education, Third Edition, 2010, ISBN 978-0-273-71830-7.
3. John G Proakis and Masoud Salehi, “Communication Systems Engineering”, 2nd Edition, Pearson Education, ISBN 978-93-325-5513-6.

ARM MICROCONTROLLER & EMBEDDED SYSTEMS

B.E., VI Semester, Electronics & Communication Engineering/ Telecommunication Engineering

[As per Choice Based Credit System (CBCS) scheme]

ARM MICROCONTROLLER & EMBEDDED SYSTEMS

B.E., VI Semester, Electronics & Communication Engineering/ Telecommunication Engineering

[As per Choice Based Credit System (CBCS) Scheme]

Course Code	**15EC62**	**IA Marks**	**20**
Number of Lecture Hours/Week	**04**	**Exam Marks**	**80**
Total Number of Lecture Hours	**50 (10 Hours / Module)**	**Exam Hours**	**03**

CREDITS – 04

Course objectives: This course will enable students to:

- Understand the architectural features and instruction set of 32 bit microcontroller ARM Cortex M3.
- Program ARM Cortex M3 using the various instructions and C language for different applications.
- Understand the basic hardware components and their selection method based on the characteristics and attributes of an embedded system.
- Develop the hardware software co-design and firmware design approaches.
- Explain the need of real time operating system for embedded system applications.

Module-1

ARM-32 bit Microcontroller: Thumb-2 technology and applications of ARM, Architecture of ARM Cortex M3, Various Units in the architecture, Debugging support, General Purpose Registers, Special Registers, exceptions, interrupts, stack operation, reset sequence (Text 1: Ch 1, 2, 3) **L1, L2**

Module-2

ARM Cortex M3 Instruction Sets and Programming: Assembly basics, Instruction list and description, Useful instructions, Memory mapping, Bit-band operations and CMSIS, Assembly and C language Programming (Text 1: Ch-4, Ch-5, Ch-10 (10.1, 10.2, 10.3, 10.5 only) **L1, L2, L3**

Module-3

Embedded System Components: Embedded Vs General computing system, Classification of Embedded systems, Major applications and purpose of ES. Core of an Embedded System including all types of processor/controller, Memory, Sensors, Actuators, LED, 7 segment LED display, Optocoupler, Relay, Piezo buzzer, Push button switch, Communication Interface (onboard and external types), Embedded firmware, Other system components.
(Text 2: All the Topics from Ch-1 and Ch-2, excluding 2.3.3.4 (stepper motor), 2.3.3.8 (keyboard) and 2.3.3.9 (PPI) sections). **L1, L2, L3**

Module-4

Embedded System Design Concepts: Characteristics and Quality Attributes of Embedded Systems, Operational and non-operational quality attributes, Embedded

Systems-Application and Domain specific, Hardware Software Co-Design and Program Modelling (excluding UML), Embedded firmware design and development (excluding C language).
(Text 2: Ch-3, Ch-4, Ch-7 (Sections 7.1, 7.2 only), Ch-9 (Sections 9.1, 9.2, 9.3.1, 9.3.2 only) **L1, L2, L3**

Module-5

RTOS and IDE for Embedded System Design: Operating System basics, Types of operating systems, Task, process and threads (Only POSIX Threads with an example program), Thread preemption, Preemptive Task scheduling techniques, Task Communication, Task synchronization issues – Racing and Deadlock, Concept of Binary and counting semaphores (Mutex example without any program), How to choose an RTOS, Integration and testing of Embedded hardware and firmware, Embedded system Development Environment – Block diagram (excluding Keil), Disassembler/decompiler, simulator, emulator and debugging techniques
(Text 2: Ch-10 (Sections 10.1, 10.2, 10.3, 10.5.2 , 10.7, 10.8.1.1, 10.8.1.2, 10.8.2.2, 10.10 only), Ch 12, Ch-13 (a block diagram before 13.1, 13.3, 13.4, 13.5, 13.6 only)
L1, L2, L3

Course outcomes: After studying this course, students will be able to:

- Describe the architectural features and instructions of 32 bit microcontroller ARM Cortex M3.
- Apply the knowledge gained for Programming ARM Cortex M3 for different applications.
- Understand the basic hardware components and their selection method based on the characteristics and attributes of an embedded system.
- Develop the hardware /software co-design and firmware design approaches.
- Explain the need of real time operating system for embedded system applications.

Text Books:

1. Joseph Yiu, "The Definitive Guide to the ARM Cortex-M3", 2nd Edition, Newnes, (Elsevier), 2010.

2. Shibu K V, "Introduction to Embedded Systems", Tata McGraw Hill Education Private Limited, 2nd Edition.

VLSI Design

B.E., VI Semester, Electronics & Communication Engineering

[As per Choice Based Credit System (CBCS) scheme]

Subject Code	15EC63	IA Marks	20
Number of Lecture Hours/Week	04	Exam Marks	80
Total Number of Lecture Hours	50 (10 Hours / Module)	Exam Hours	03
CREDITS – 04			

Course Objectives: The objectives of the course is to enable students to:

- Impart knowledge of MOS transistor theory and CMOS technologies
- Impart knowledge on architectural choices and performance tradeoffs involved in designing and realizing the circuits in CMOS technology
- Cultivate the concepts of subsystem design processes
- Demonstrate the concepts of CMOS testing

Module-1	**RBT Level**
Introduction: A Brief History, MOS Transistors, MOS Transistor Theory, Ideal I-V Characteristics, Non-ideal I-V Effects, DC Transfer Characteristics (1.1, 1.3, 2.1, 2.2, 2.4, 2.5 of TEXT2). **Fabrication:** nMOS Fabrication, CMOS Fabrication [P-well process, N-well process, Twin tub process], BiCMOS Technology (1.7, 1.8,1.10 of TEXT1).	L1, L2
Module-2	
MOS and BiCMOS Circuit Design Processes: MOS Layers, Stick Diagrams, Design Rules and Layout. **Basic Circuit Concepts:** Sheet Resistance, Area Capacitances of Layers, Standard Unit of Capacitance, Some Area Capacitance Calculations, Delay Unit, Inverter Delays, Driving Large Capacitive Loads (3.1 to 3.3, 4.1, 4.3 to 4.8 of TEXT1).	L1, L2, L3
Module-3	
Scaling of MOS Circuits: Scaling Models & Scaling Factors for Device Parameters **Subsystem Design Processes:** Some General considerations, An illustration of Design Processes, **Illustration of the Design Processes**- Regularity, Design of an ALU Subsystem, The Manchester Carry-chain and Adder Enhancement Techniques(5.1, 5.2, 7.1, 7.2, 8.2, 8.3, 8.4.1, 8.4.2 of TEXT1).	L1, L2, L3
Module-4	
Subsystem Design: Some Architectural Issues, Switch Logic, Gate(restoring) Logic, Parity Generators, Multiplexers, The Programmable Logic Array (PLA) (6.1to 6.3, 6.4.1, 6.4.3, 6.4.6 of TEXT1). **FPGA Based Systems:** Introduction, Basic concepts, Digital design and FPGA's, FPGA based System design, FPGA architecture, Physical design for FPGA's (1.1 to 1.4, 3.2, 4.8 of TEXT3).	L1, L2, L3
Module-5	
Memory, Registers and Aspects of system Timing- System Timing Considerations, Some commonly used Storage/Memory elements (9.1, 9.2 of TEXT1).	L1, L2, L3

Testing and Verification: Introduction, Logic Verification, Logic Verification Principles, Manufacturing Test Principles, Design for testability (12.1, 12.1.1, 12.3, 12.5, 12.6 of TEXT 2).	

Course outcomes: At the end of the course, the students will be able to:

- Demonstrate understanding of MOS transistor theory, CMOS fabrication flow and technology scaling.
- Draw the basic gates using the stick and layout diagrams with the knowledge of physical design aspects.
- Interpret Memory elements along with timing considerations
- Demonstrate knowledge of FPGA based system design
- Interpret testing and testability issues in VLSI Design
- Analyze CMOS subsystems and architectural issues with the design constraints.

Question paper pattern:

- The question paper will have ten questions
- Each full question consists of 16 marks.
- There will be 2 full questions (with a maximum of Three sub questions) from each module.
- Each full question will have sub questions covering all the topics under a module
- The students will have to answer 5 full questions, selecting one full question from each module

Text Books:

1. **"Basic VLSI Design"**- Douglas A. Pucknell& Kamran Eshraghian, PHI 3rd Edition (original Edition – 1994).
2. **"CMOS VLSI Design- A Circuits and Systems Perspective"-** Neil H.E. Weste, David Harris, Ayan Banerjee, 3rd Edition, Pearson Education.
3. **"FPGA Based System Design"-** Wayne Wolf, Pearson Education, 2004, Technology and Engineering.

COMPUTER COMMUNICATION NETWORKS

B.E., VI Semester, Electronics & Communication Engineering / Telecommunication Engineering

[As per Choice Based Credit System (CBCS) scheme]

COMPUTER COMMUNICATION NETWORKS **B.E., VI Semester, Electronics & Communication Engineering / Telecommunication Engineering** **[As per Choice Based Credit System (CBCS) Scheme]**			
Course Code	**15EC64**	**IA Marks**	**20**
Number of Lecture Hours/Week	**04**	**Exam Marks**	**80**
Total Number of Lecture Hours	**50 (10 Hours / Module)**	**Exam Hours**	**03**

CREDITS – 04

Course Objectives: This course will enable students to:

- Understand the layering architecture of OSI reference model and TCP/IP protocol suite.
- Understand the protocols associated with each layer.
- Learn the different networking architectures and their representations.
- Learn the various routing techniques and the transport layer services.

Module-1

Introduction: Data Communications: Components, Representations, Data Flow, Networks: Physical Structures, Network Types: LAN, WAN, Switching, Internet.

Network Models: Protocol Layering: Scenarios, Principles, Logical Connections, TCP/IP Protocol Suite: Layered Architecture, Layers in TCP/IP suite, Description of layers, Encapsulation and Decapsulation, Addressing, Multiplexing and Demultiplexing, The OSI Model: OSI Versus TCP/IP.

Data-Link Layer: Introduction: Nodes and Links, Services, Categories' of link, Sublayers, Link Layer addressing: Types of addresses, ARP. Data Link Control (DLC) services: Framing, Flow and Error Control, Data Link Layer Protocols: Simple Protocol, Stop and Wait protocol, Piggybacking. **L1, L2**

Module-2

Media Access Control: Random Access: ALOHA, CSMA, CSMA/CD, CSMA/CA. Controlled Access: Reservation, Polling, Token Passing.

Wired LANs: Ethernet: Ethernet Protocol: IEEE802, Ethernet Evolution, Standard Ethernet: Characteristics, Addressing, Access Method, Efficiency, Implementation, Fast Ethernet: Access Method, Physical Layer, Gigabit Ethernet: MAC Sublayer, Physical Layer, 10 Gigabit Ethernet. **L1, L2**

Module-3

Wireless LANs: Introduction: Architectural Comparison, Characteristics, IEEE 802.11: Architecture, MAC Sublayer, Addressing Mechanism, Physical Layer, Bluetooth: Architecture, Layers.

Connecting Devices: Hubs, Switches, **Virtual LANs:** Membership, Configuration, Communication between Switches and Routers, Advantages.

Network Layer: Introduction, Network Layer services: Packetizing, Routing and Forwarding, Other services, Packet Switching: Datagram Approach, Virtual Circuit Approach, IPV4 Addresses: Address Space, Classful Addressing, Classless Addressing,

DHCP, Network Address Resolution, Forwarding of IP Packets: Based on destination Address and Label. **L1, L2**

Module-4

Network Layer Protocols: Internet Protocol (IP): Datagram Format, Fragmentation, Options, Security of IPv4 Datagrams, ICMPv4: Messages, Debugging Tools, Mobile IP: Addressing, Agents, Three Phases, Inefficiency in Mobile IP.

Unicast Routing: Introduction, Routing Algorithms: Distance Vector Routing, Link State Routing, Path vector routing, Unicast Routing Protocol: Internet Structure, Routing Information Protocol, Open Shortest Path First, Border Gateway Protocol Version 4. **L1, L2, L3**

Module-5

Transport Layer: Introduction: Transport Layer Services, Connectionless and Connection oriented Protocols, Transport Layer Protocols: Simple protocol, Stop and wait protocol, Go-Back-N Protocol, Selective repeat protocol, User Datagram Protocol: User Datagram, UDP Services, UDP Applications, Transmission Control Protocol: TCP Services, TCP Features, Segment, Connection, State Transition diagram, Windows in TCP, Flow control, Error control, TCP congestion control. **L1, L2**

Course Outcomes: At the end of the course, the students will be able to:

- Identify the protocols and services of Data link layer.
- Identify the protocols and functions associated with the transport layer services.
- Describe the layering architecture of computer networks and distinguish between the OSI reference model and TCP/IP protocol suite.
- Distinguish the basic network configurations and standards associated with each network.
- Construct a network model and determine the routing of packets using different routing algorithms.

Text Book:

Data Communications and Networking , Forouzan, 5th Edition, McGraw Hill, 2016 ISBN: 1-25-906475-3

Reference Books:

1. Computer Networks, James J Kurose, Keith W Ross, Pearson Education, 2013, ISBN: 0-273-76896-4
2. Introduction to Data Communication and Networking, Wayarles Tomasi, Pearson Education, 2007, ISBN:0130138282

CELLULAR MOBILE COMMUNICATIONS

B.E., VI Semester, Electronics & Communication Engineering/ Telecommunication Engineering

[As per Choice Based Credit System (CBCS) scheme]

Subject Code	15EC651	IA Marks	20
Number of Lecture Hours/Week	03	Exam Marks	80
Total Number of Lecture Hours	40 (8 Hours / Module)	Exam Hours	03
CREDITS – 03			

Course Objectives: This course enables students to:

- Understand the application of multi user access in a cellular communication scenario.
- Understand the propagation mechanisms in an urban mobile communications using statistical and empirical models.
- Understand system architecture, call processing protocols and services of GSM, GPRS and EDGE.
- Understand system architecture, call processing protocols and services of CDMA based systems IS95 and CDMA2000.

Module-1	**RBT Level**
Cellular Concept: Frequency Reuse, Channel Assignment Strategies, Interference and System Capacity, Power Control for Reducing Interference, Trunking and Grade of Service, Improving Capacity in Cellular Systems. **Mobile Radio Propagation:** Large Scale path Loss- Free Space Model, Three basic propagation mechanisms, Practical Link Budget Design using Path Loss Models, Outdoor Propagation Models – Okumura, Hata, PCS Extension to Hata Model (explanations only) (Text 1).	L1, L2
Module-2	
Mobile Radio Propagation: Small-Scale Fading and Multipath: Small scale Multipath Propagation, Impulse Response Model of a Multipath Channel, Small-Scale Multipath Measurements, Parameters of Mobile Multipath Channels, Types of Small-Scale Fading, Rayleigh and Ricean Distributions, Statistical Model for Multipath Fading Channels (Clarke's Model for Flat Fading only).(Text 1)	L1, L2
Module-3	
System Architecture and Addressing: System architecture, The SIM concept, Addressing, Registers and subscriber data, Location registers (HLR and VLR) Security-related registers (AUC and EIR), Subscriber data, Network interfaces and configurations. **Air Interface – GSM Physical Layer:** Logical channels, Physical channels, Synchronization- Frequency and clock synchronization, Adaptive frame synchronization, Mapping of logical onto physical channels, Radio subsystem link control, Channel coding, source coding and speech processing, Source coding and speech processing, Channel coding, Power-up scenario. **GSM Protocols:** Protocol architecture planes, Protocol architecture of the user plane, Protocol architecture of the signaling plane, Signaling at the air interface (Um), Signaling at the A and Abis interfaces, Security-related network functions,	L1, L2

Signaling at the user interface.(Text 2)	
Module-4	
GSM Roaming Scenarios and Handover: Mobile application part interfaces, Location registration and location update, Connection establishment and termination, Handover. (up to 6.4.1 only in Text2) **Services:** Classical GSM services, Popular GSM services: SMS and MMS. **Improved data services in GSM**: **GPRS, HSCSD and EDGE** GPRS System architecture of GPRS , Services , Session management, mobility management and routing, Protocol architecture, Signaling plane, Interworking with IP networks, Air interface, Authentication and ciphering, Summary of GPRS . HSCSD: Architecture, Air interface, HSCSD resource allocation and capacity issues. EDGE: The EDGE concept, EDGE physical layer, modulation and coding, EDGE: effects on the GSM system architecture, ECSD and EGPRS. (Text 2)	L1, L2
Module-5	
CDMA Technology – Introduction to CDMA,CDMA frequency bands, CDMA Network and System Architecture, CDMA Channel concept, Forward Logical Channels, Reverse logical Channels, CDMA frame format, CDMA System Operations(Initialization/Registration), Call Establishment, CDMA Call handoff,IS-95B,CDMA2000,W-CDMA,UMTS,CDMA data networks, Evolution of CDMA to 3G, CDMA 2000 RAN Components, CDMA 2000 Packet Data Service. (Text 3)	L1, L2

Course outcomes: At the end of the course, the students will be able to:

- Apply the understanding of statistical characterization of urban mobile channels to compute the performance for simple modulation schemes.
- Demonstrate the limitations of GSM, GPRS and CDMA to meet high data rate requirements and limited improvements that are needed.
- Analyze the call process procedure between a calling number and called number for all scenarios in GSM or CDMA based systems.
- Test and validate voice and data call handling for various scenarios in GSM and CDMA systems for national and international interworking situations.

Question paper pattern:

- The question paper will have ten questions
- Each full question consists of 16 marks**.**
- There will be 2 full questions (with a maximum of Three sub questions) from each module.
- Each full question will have sub questions covering all the topics under a module
- The students will have to answer 5 full questions, selecting one full question from each module

Text Books:

1. Theodore Rapport, "Wireless Communications – Principles and Practice", Prentice Hall of India , 2nd Edition, 2007, ISBN 978-8-120-32381-0.
2. Jorg Eberspacher, Hans-Jorg Vogel, Christian Bettstetter, Christian Hartmann,

"GSM– Architecture, Protocols and Services", Wiley,3rd Edition, 2009,ISBN-978-0-470-03070-7.
3. Gary J Mullet, "Introduction To Wireless Telecommunications Systems and Networks", Cengage Learning.

ADAPTIVE SIGNAL PROCESSING

B.E., VI Semester, Electronics & Communication Engineering/ Telecommunication Engineering

[As per Choice Based Credit System (CBCS) scheme]

Subject Code	15EC652	IA Marks	20
Number of Lecture Hours/Week	03	Exam Marks	80
Total Number of Lecture Hours	40 (8 Hours / Module)	Exam Hours	03
CREDITS – 03			

Course Objectives: The objectives of this course are to:

- Introduce to the concept and need of adaptive filters and popular adaptive signal processing algorithms
- Understand the concepts of training and convergence and the trade-off between performance and complexity.
- Introduce to common linear estimation techniques
- Demonstrate applications of adaptive systems to sample problems.
- Introduce inverse adaptive modelling.

Module-1	**RBT Level**
Adaptive systems: Definitions and characteristics - applications – properties-examples - adaptive linear combiner input signal and weight vectors - performance function-gradient and minimum mean square error - introduction to filtering-smoothing and prediction - linear optimum filtering-orthogonality - Wiener – Hopf equation-performance surface(Chapters 1& 2 of Text).	L1, L2
Module-2	
Searching performance surface-stability and rate of convergence: Learning curve-gradient search - Newton's method - method of steepest descent - comparison - Gradient estimation - performance penalty - variance - excess MSE and time constants – mis-adjustments (Chapters 4& 5 of Text).	L1, L2
Module-3	
LMS algorithm convergence of weight vector: LMS/Newton algorithm - properties - sequential regression algorithm - adaptive recursive filters - random-search algorithms - lattice structure - adaptive filters with orthogonal signals (Chapters 6& 8 of Text).	L1, L2, L3
Module-4	
Applications-adaptive modeling and system identification: Multipath communication channel, geophysical exploration, FIR digital filter synthesis. (Chapter 9 of Text).	L1, L2, L3
Module-5	
Inverse adaptive modeling: Equalization, and deconvolution adaptive equalization of telephone channels-adapting poles and zeros for IIR digital filter synthesis(Chapter 10 of Text).	L1, L2, L3

Course Outcomes: At the end of the course, students should be able to:

- Devise filtering solutions for optimising the cost function indicating error in estimation of parameters and appreciate the need for adaptation in design.
- Evaluate the performance of various methods for designing adaptive filters

through estimation of different parameters of stationary random process clearly considering practical application specifications.

- Analyse convergence and stability issues associated with adaptive filter design and come up with optimum solutions for real life applications taking care of requirements in terms of complexity and accuracy.
- Design and implement filtering solutions for applications such as channel equalisation, interference cancelling and prediction considering present day challenges.

Question paper pattern:

- The question paper will have ten questions
- Each full question consists of 16 marks.
- There will be 2 full questions (with a maximum of Three sub questions) from each module.
- Each full question will have sub questions covering all the topics under a module.
- The students will have to answer 5 full questions, selecting one full question from each module.

Text Book:

Bernard Widrow and Samuel D. Stearns, "Adaptive Signal Processing", Person Education, 1985.

Reference Books:

1. Simon Haykin, "Adaptive Filter Theory", Pearson Education, 2003.
2. John R. Treichler, C. Richard Johnson, Michael G. Larimore, "Theory and Design of Adaptive Filters", Prentice-Hall of India, 2002.

ARITIFICAL NEURAL NETWORKS

B.E., VI Semester, Electronics & Communication Engineering/ Telecommunication Engineering

[As per Choice Based Credit System (CBCS) scheme]

Subject Code	15EC653	IA Marks	20
Number of Lecture Hours/Week	03	Exam Marks	80
Total Number of Lecture Hours	40 (8 Hours / Module)	Exam Hours	03

CREDITS – 03

Course Objectives: The objectives of this course are:

- Understand the basics of ANN and comparison with Human brain
- Provide knowledge on Generalization and function approximation and various architectures of building an ANN
- Provide knowledge of reinforcement learning using neural networks
- Provide knowledge of unsupervised learning using neural networks.

Module-1	**RBT Level**
Introduction: Biological Neuron – Artificial Neural Model - Types of activation functions – **Architecture**: Feedforward and Feedback, Convex Sets, Convex Hull and Linear Separability, Non-Linear Separable Problem. XOR Problem, Multilayer Networks. **Learning:** Learning Algorithms, Error correction and Gradient Descent Rules, Learning objective of TLNs, Perceptron Learning Algorithm, Perceptron Convergence Theorem.	L1, L2
Module-2	
Supervised Learning: Perceptron learning and Non Separable sets, α-Least Mean Square Learning, MSE Error surface, Steepest Descent Search, μ-LMS approximate to gradient descent, Application of LMS to Noise Cancelling, Multi-layered Network Architecture, Backpropagation Learning Algorithm, Practical consideration of BP algorithm.	L1, L2, L3
Module-3	
Support Vector Machines and Radial Basis Function: Learning from Examples, Statistical Learning Theory, Support Vector Machines, SVM application to Image Classification, Radial Basis Function Regularization theory, Generalized RBF Networks, Learning in RBFNs, RBF application to face recognition.	L1, L2, L3
Module-4	
Attractor Neural Networks: Associative Learning Attractor Associative Memory, Linear Associative memory, Hopfield Network, application of Hopfield Network, Brain State in a Box neural Network, Simulated Annealing, Boltzmann Machine, Bidirectional Associative Memory.	L1, L2, L3
Module-5	
Self-organization Feature Map: Maximal Eigenvector Filtering, Extracting Principal Components, Generalized Learning Laws, Vector Quantization, Self-organization Feature Maps, Application of SOM, Growing Neural Gas.	L1, L2, L3

Course outcomes: At the end of the course, students should be able to:

- Understand the role of neural networks in engineering, artificial intelligence, and cognitive modelling.
- Understand the concepts and techniques of neural networks through the study of the most important neural network models.
- Evaluate whether neural networks are appropriate to a particular application.
- Apply neural networks to particular applications, and to know what steps to take to improve performance.

Question paper pattern:

The question paper will have ten questions.

- Each full question consists of 16 marks.
- There will be 2 full questions (with a maximum of Three sub questions) from each module.
- Each full question will have sub questions covering all the topics under a module. The students will have to answer 5 full questions, selecting one full question from each module.

Text Book:

Neural Networks A Classroom Approach– Satish Kumar, McGraw Hill Education (India) Pvt. Ltd, Second Edition.

Reference Books:

1. **Introduction to Artificial Neural Systems-**J.M. Zurada, Jaico Publications 1994.
2. **Artificial Neural Networks-**B. Yegnanarayana, PHI, New Delhi 1998.

DIGITAL SWITCHING SYSTEMS

B.E., VI Semester, Electronics & Communication Engineering/ Telecommunication Engineering

[As per Choice Based Credit System (CBCS) scheme]

Subject Code	15EC654	IA Marks	20
Number of Lecture Hours/Week	03	Exam Marks	80
Total Number of Lecture Hours	40 (8 Hours / Module)	Exam Hours	03
CREDITS – 03			

Course Objectives: This course will enable students to

- Understand the basics of telecommunication networks and digital transmission of data.
- Study about the evolution of switching systems and the digital switching.
- Study about the telecommunication traffic and its measurements.
- Learn the technologies associated with the data switching operations.
- Understand the use of software for the switching and its maintenance

Module-1	**RBT Level**
DEVELOPMENT OF TELECOMMUNICATIONS: Network structure, Network services, terminology, Regulation, Standards. Introduction to telecommunications transmission, Power levels, Four wire circuits, Digital transmission, FDM,TDM, PDH and SDH [Text-1]	L1, L2
Module-2	
EVOLUTION OF SWITCHING SYSTEMS: Introduction, Message switching, Circuit switching, Functions of switching systems, Distribution systems, Basics of crossbar systems, Electronic switching. **DIGITAL SWITCHING SYSTEMS:** Switching system hierarchy, Evolution of digital switching systems, Stored program control switching systems, Building blocks of a digital switching system, Basic call processing. [Text-1 and 2]	L1, L2
Module-3	
TELECOMMUNICATIONS TRAFFIC: Introduction, Unit of traffic, Congestion, Traffic measurement, Mathematical model, lost call systems, Queuing systems. **SWITCHING SYSTEMS:** Introduction, Single stage networks, Gradings, Link Systems, GOS of Linked systems. [Text-1]	L1, L2
Module-4	
TIME DIVISION SWITCHING: Introduction, space and time switching, Time switching networks, Synchronisation. **SWITCHING SYSTEM SOFTWARE:** Introduction, Basic software architecture, Software architecture for level 1to 3 control, Digital switching system software classification, Call models, Software linkages during call, Feature flow diagram, Feature interaction. [Text-1 and 2]	L1, L2
Module-5	
MAINTENANCE OF DIGITAL SWITCHING SYSTEM: Introduction , Software maintenance, Interface of a typical digital switching system central office, System outage and its impact on digital switching system reliability, Impact	L1, L2

of software patches on digital switching system maintainability, A methodology for proper maintenance of digital switching system **A GENERIC DIGITAL SWITCHING SYSTEM MODEL:** Introduction, Hardware architecture, Software architecture, Recovery strategy, Simple call through a digital system, Common characteristics of digital switching systems. Reliability analysis. [Text-2]	

Course Outcomes: At the end of the course, students should be able to:

- Describe the electromechanical switching systems and its comparison with the digital switching.
- Determine the telecommunication traffic and its measurements.
- Define the technologies associated with the data switching operations.
- Describe the software aspects of switching systems and its maintenance.

Question paper pattern:

- The question paper will have ten questions
- Each full question consists of 16 marks.
- There will be 2 full questions (with a maximum of Three sub questions) from each module.
- Each full question will have sub questions covering all the topics under a module
- The students will have to answer 5 full questions, selecting one full question from each module

Text Books:

1. Telecommunication and Switching, Traffic and Networks - J E Flood: Pearson Education, 2002.
2. Digital Switching Systems, Syed R. Ali, TMH Ed 2002.

Reference Book:

Digital Telephony - John C Bellamy: Wiley India Pvt. Ltd, 3rd Ed, 2008.

MICROELECTRONICS

B.E., VI Semester, Electronics & Communication Engineering/ Telecommunication Engineering

[As per Choice Based Credit System (CBCS) scheme]

Subject Code	15EC655	IA Marks	20
Number of Lecture Hours/Week	03	Exam Marks	80
Total Number of Lecture Hours	40 (8 Hours / Module)	Exam Hours	03

CREDITS – 03

Course Objectives: This course will enable students to:

- Be familiar with the MOSFET physical structure and operation, terminal characteristics, circuit models and basic circuit applications.
- Confront integrated device and/or circuit design problems, identify the design issues, and develop solutions.
- Analyze and design microelectronic circuits for linear amplifier and digital applications.
- Contrast the input/output and gain characteristics of single-transistor, differential and common two-transistor linear amplifier building block stages.

Module-1	**RBT Level**
MOSFETS: Device Structure and Physical Operation, V-I Characteristics, MOSFET Circuits at DC, MOSFET as an amplifier and as a switch.	L1, L2
Module-2	
MOSFETS (continued): Biasing in MOS amplifier Circuits, Small Signal Operation and Models, Basic MOSFET amplifier, MOSFET internal capacitances, frequency response of CS amplifier.	L1, L2
Module-3	
MOSFETS (continued): Discrete circuit MOS amplifiers. **Single Stage IC Amplifier:** Comparison of MOSFET and BJT, Current sources, Current mirrors and Current steering circuits, high frequency response- general considerations.	L1, L2, L3
Module-4	
Single Stage IC Amplifier (continued):CS with active loads, high frequency response of CS, CG amplifiers with active loads, high frequency response of CG, Cascode amplifiers. CS with source degeneration (only MOS amplifiers to be dealt).	L1, L2
Module-5	
Differential and Multistage Amplifiers: The MOS differential pair, small signal operation of MOS differential pair, Differential amplifier with active loads, and frequency response of the differential amplifiers. Multistage amplifiers (only MOS amplifiers to be dealt).	L1, L2
Course outcomes: After studying this course, students will be able to: • Explain the underlying physics and principles of operation of Metaloxide-semiconductor (MOS) capacitors and MOS field effect transistors (MOSFETs). • Describe and apply simple large signal circuit models for MOSFETs. • Analyze and design microelectronic circuits for linear amplifier for digital applications.	

• Use of discrete MOS circuits to design Single stage and Multistage amplifiers to meet stated operating specifications.	

Question paper pattern:

- The question paper will have ten questions
- Each full question consists of 16 marks.
- There will be 2 full questions (with a maximum of Three sub questions) from each module.
- Each full question will have sub questions covering all the topics under a module.
- The students will have to answer 5 full questions, selecting one full question from each module.

Text Book:

"Microelectronic Circuits", Adel Sedra and K.C. Smith, 6th Edition, Oxford University Press, International Version, 2009.

Reference Books:

1. **"Microelectronics An integrated approach",** Roger T Howe, Charles G Sodini, Pearson education.
2. **"Fundamentals of Microelectronics",** Behzad Razavi, John Wiley India Pvt. Ltd, 2008.
3. **"Microelectronics – Analysis and Design",** Sundaram Natarajan, Tata McGraw-Hill, 2007.

EMBEDDED CONTROLLER LAB

B.E., VI Semester, Electronics & Communication Engineering/ Telecommunication Engineering

[As per Choice Based Credit System (CBCS) scheme]

Subject Code	15ECL67	IA Marks	20
Number of Lecture Hours/Week	01Hr Tutorial (Instructions) + 02 Hours Laboratory = 03	Exam Marks	80
RBT Levels	L1, L2, L3	Exam Hours	03

CREDITS – 02

Course objectives: This course will enable students to:

- Understand the instruction set of ARM Cortex M3, a 32 bit microcontroller and the software tool required for programming in Assembly and C language.
- Program ARM Cortex M3 using the various instructions in assembly level language for different applications.
- Interface external devices and I/O with ARM Cortex M3.
- Develop C language programs and library functions for embedded system applications.

Laboratory Experiments

PART-A: Conduct the following Study experiments to learn ALP using ARM Cortex M3 Registers using an Evaluation board and the required software tool.

1. ALP to multiply two 16 bit binary numbers.
2. ALP to find the sum of first 10 integer numbers.

PART-B: Conduct the following experiments on an ARM CORTEX M3 evaluation board using evaluation version of Embedded 'C' & Keil uVision-4 tool/compiler.

1. Display “Hello World” message using Internal UART.
2. Interface and Control a DC Motor.
3. Interface a Stepper motor and rotate it in clockwise and anti-clockwise direction.

4. Interface a DAC and generate Triangular and Square waveforms.
5. Interface a 4x4 keyboard and display the key code on an LCD.
6. Using the Internal PWM module of ARM controller generate PWM and vary its duty cycle.
7. Demonstrate the use of an external interrupt to toggle an LED On/Off.
8. Display the Hex digits 0 to F on a 7-segment LED interface, with an appropriate delay in between.
9. Interface a simple Switch and display its status through Relay, Buzzer and LED.
10. Measure Ambient temperature using a sensor and SPI ADC IC.

Course outcomes: After studying this course, students will be able to:

- Understand the instruction set of 32 bit microcontroller ARM Cortex M3, and the software tool required for programming in Assembly and C language.
- Develop assembly language programs using ARM Cortex M3 for different applications.
- Interface external devices and I/O with ARM Cortex M3.
- Develop C language programs and library functions for embedded system applications.

Conduction of Practical Examination:

1. PART-B experiments using Embedded-C are only to be considered for the practical examination. PART-A ALP programs are for study purpose and can be considered for Internal Marks evaluation.

2. Strictly follow the instructions as printed on the cover page of answer script for breakup of marks.

3. Change of experiment is allowed only once and Marks allotted to the procedure part to be made zero.

COMPUTER NETWORKS LABORATORY

B.E., VI Semester, Electronics & Communication Engineering

[As per Choice Based Credit System (CBCS) scheme]

Subject Code	15ECL68	IA Marks	20
Number of Lecture Hours/Week	01Hr Tutorial (Instructions) + 02 Hours Laboratory = 03	Exam Marks	80
RBT Levels	L1, L2, L3	Exam Hours	03
CREDITS – 02			

Course objectives: This course will enable students to:

- Choose suitable tools to model a network and understand the protocols at various OSI reference levels.
- Design a suitable network and simulate using a Network simulator tool.
- Simulate the networking concepts and protocols using C/C++ programming.
- Model the networks for different configurations and analyze the results.

Laboratory Experiments

PART-A: Simulation experiments using NS2/ NS3/ OPNET/ NCTUNS/ NetSim/ QualNet or any other equivalent tool

1. Implement a point to point network with four nodes and duplex links between them. Analyze the network performance by setting the queue size and varying the bandwidth.
2. Implement a four node point to point network with links n0-n2, n1-n2 and n2-n3. Apply TCP agent between n0-n3 and UDP between n1-n3. Apply relevant applications over TCP and UDP agents changing the parameter and determine the number of packets sent by TCP/UDP.
3. Implement Ethernet LAN using n (6-10) nodes. Compare the throughput by changing the error rate and data rate.
4. Implement Ethernet LAN using n nodes and assign multiple traffic to the nodes and obtain congestion window for different sources/ destinations.
5. Implement ESS with transmission nodes in Wireless LAN and obtain the performance parameters.
6. Implementation of Link state routing algorithm.

PART-B: Implement the following in C/C++

1. Write a program for a HLDC frame to perform the following.

i) Bit stuffing

ii) Character stuffing.

2. Write a program for distance vector algorithm to find suitable path for transmission.

3. Implement Dijkstra's algorithm to compute the shortest routing path.
4. For the given data, use CRC-CCITT polynomial to obtain CRC code. Verify the program for the cases

   a. Without error

b. With error

5. Implementation of Stop and Wait Protocol and Sliding Window Protocol
6. Write a program for congestion control using leaky bucket algorithm.

Course outcomes: On the completion of this laboratory course, the students will be able to:

- Use the network simulator for learning and practice of networking algorithms.
- Illustrate the operations of network protocols and algorithms using C programming.
- Simulate the network with different configurations to measure the performance parameters.
- Implement the data link and routing protocols using C programming.

Conduct of Practical Examination:

- All laboratory experiments are to be included for practical examination.
- For examination one question from software and one question from hardware or only one hardware experiments based on the complexity to be set.
- Students are allowed to pick one experiment from the lot.
- Strictly follow the instructions as printed on the cover page of answer script for breakup of marks.
- Change of experiment is allowed only once and Marks allotted to the procedure part to be made zero.

6th Semester Open Electives Syllabus for the courses offered by EC/TC Board:

DATA STRUCTURE USING C++
B.E VI Semester (Open Elective)
[As per Choice Based Credit System (CBCS) Scheme]

Course Code	**15EC661**	**IA Marks**	**20**
Number of Lecture Hours/Week	**03**	**Exam Marks**	**80**
Total Number of Lecture Hours	**40 (08 Hrs per Module)**	**Exam Hours**	**03**

CREDITS – 03

Course objectives: This course will enable students to

- Explain fundamentals of data structures and their applications essential for programming/problem solving
- Analyze Linear Data Structures: Stack, Queues, Lists
- Analyze Non Linear Data Structures: Trees
- Assess appropriate data structure during program development/Problem Solving

Module -1

INTRODUCTION: Functions and parameters, Dynamic memory allocation, Recursion.
LINEAR LISTS: Data objects and structures, Linear list data structures, Array Representation, Vector Representation, Singly Linked lists and chains. **L1, L2**

Module -2

ARRAYS AND MATRICS: Arrays, Matrices, Special matrices, Sparse matrices.

STACKS: The abstract data types, Array Representation, Linked Representation, Applications-Parenthesis Matching & Towers of Hanoi. **L1, L2, L3**

Module -3

QUEUES: The abstract data types, Array Representation, Linked Representation, Applications-Railroad car arrangement.

HASHING: Dictionaries, Linear representation, Hash table representation. **L1, L2, L3**

Module -4

BINARY AND OTHER TREES: Trees, Binary trees, Properties and representation of binary trees, Common binary tree operations, Binary tree traversal the ADT binary tree, ADT binary tree and the class linked binary tree. **L1, L2, L3**

Module -5

Priority Queues: Linear lists, Heaps, Applications-Heap Sorting.
Search Trees: Binary search trees operations and implementation, Binary Search trees with duplicates. **L1, L2, L3**

Course outcomes: After studying this course, students will be able to:

- Acquire knowledge of Dynamic memory allocation, Various types of data structures, operations and algorithms and Sparse matrices and Hashing
- Understand non Linear data structures trees and their applications
- Design appropriate data structures for solving computing problems
- Analyze the operations of Linear Data structures: Stack, Queue and Linked List and their applications

Text Book:

Data structures, Algorithms, and applications in C++, Sartaj Sahni, Universities Press, 2nd Edition, 2005.

Reference Books:

1. **Data structures, Algorithms, and applications in C++,** Sartaj Sahni, Mc. Graw Hill, 2000.
2. **Object Oriented Programming with C++,** E.Balaguruswamy**,** TMH, 6th Edition, 2013.
3. **Programming in C++,** E.Balaguruswamy. TMH, 4th, 2010.

POWER ELECTRONICS

B.E., VI Semester (Open Elective)

[As per Choice Based Credit System (CBCS) scheme]

Subject Code	15EC662	IA Marks	20
Number of Lecture Hours/Week	03	Exam Marks	80
Total Number of Lecture Hours	40 (08 Hours / Module)	Exam Hours	03
CREDITS – 03			

Course Objectives: This course will enable students to

- Understand the working of various power devices.
- Study and analysis of thyristor circuits with different triggering techniques.
- Learn the applications of power devices in controlled rectifiers, converters and inverters.
- Study of power electronics circuits under different load conditions.

Module-1	**RBT Level**
Introduction - Applications of Power Electronics, Power Semiconductor Devices, Control Characteristics of Power Devices, types of Power Electronic Circuits. Power Transistors: Power BJTs: Steady state characteristics. Power MOSFETs: device operation, switching characteristics, IGBTs: device operation, output and transfer characteristics. (Text 1)	L1, L2
Module-2	
Thyristors - Introduction, Principle of Operation of SCR, Static Anode-Cathode Characteristics of SCR, Two transistor model of SCR, Gate Characteristics of SCR, Turn-ON Methods, Turn-OFF Mechanism, Turn-OFF Methods: Natural and Forced Commutation – Class A and Class B types, Gate Trigger Circuit: Resistance Firing Circuit, Resistance capacitance firing circuit. (Text 2)	L1, L2, L3
Module-3	
Controlled Rectifiers - Introduction, principle of phase controlled converter operation, Single phase full converters, Single phase dual converters. AC Voltage Controllers - Introduction, Principles of ON-OFF Control, Principle of Phase Control, Single phase control with resistive and inductive loads. (Text 1)	L1, L2, L3
Module-4	
DC-DC Converters - Introduction, principle of step-down operation and it's analysis with RL load, principle of step-up operation, Step-up converter with a resistive load, Performance parameters, Converter classification, Switching mode regulators: Buck regulator, Boost regulator, Buck-Boost Regulators. (Text 1)	L1, L2

Module-5	
Pulse Width Modulated Inverters- Introduction, principle of operation, performance parameters, Single phase bridge inverters, voltage control of single phase inverters, current source inverters, Variable DC-link inverter, Boost inverter. (Text 1)	L1, L2

Course outcomes: After studying this course, students will be able to:

- Describe the characteristics of different power devices and identify the applications.
- Illustrate the working of DC-DC converter and inverter circuit.
- Determine the output response of a thyristor circuit with various triggering options.
- Determine the response of controlled rectifier with resistive and inductive loads.

Evaluation of Internal Assessment Marks:

It is suggested that at least a few experiments of Power Electronics are conducted by the students for better understanding of the course. This activity can be considered for the evaluation of 5 marks out of 20 Internal assessment marks, reserved for the other activities.

Question paper pattern:

- The question paper will have ten questions
- Each full question consists of 16 marks.
- There will be 2 full questions (with a maximum of Three sub questions) from each module.
- Each full question will have sub questions covering all the topics under a module
- The students will have to answer 5 full questions, selecting one full question from each module

Text Book:

1. Mohammad H Rashid, Power Electronics, Circuits, Devices and Applications, 3rd/4th Edition, Pearson Education Inc, 2014, ISBN: 978-93-325-1844-5.
2. M.D Singh and K B Khanchandani, Power Electronics, 2nd Edition, Tata Mc-Graw Hill, 2009, ISBN: 0070583897.

Reference Books:

4. L. Umanand, Power Electronics, Essentials and Applications, John Wiley India Pvt. Ltd, 2009.
5. Dr. P. S. Bimbhra, “Power Electronics”, Khanna Publishers, Delhi, 2012.
6. P.C. Sen, “Modern Power Electronics”, S Chand & Co New Delhi, 2005.

DIGITAL SYSTEM DESIGN USING VERILOG

B.E., VI Semester (Open Elective)

[As per Choice Based Credit System (CBCS) scheme]

Subject Code:	15EC663	IA Marks: 20
Number of Lecture Hours/Week:	03	Exam Marks: 80
Total Number of Lecture Hours:	40 (08 Hrs per module)	Exam Hours: 03
CREDITS – 03		

Course objectives: This course will enable students to:

- Understand the concepts of Verilog Language.
- Design the digital systems as an activity in a larger systems design context.
- Study the design and operation of semiconductor memories frequently used in application specific digital system.
- Inspect how effectively IC's are embedded in package and assembled in PCB's for different application.
- Design and diagnosis of processors and I/O controllers used in embedded systems.

Module -1	RBT Level
Introduction and Methodology: Digital Systems and Embedded Systems, Real-World Circuits, Models, Design Methodology (1.1, 1.3 to 1.5 of Text). **Combinational Basics:** Combinational Components and Circuits, Verification of Combinational Circuits.(2.3 and 2.4 of Text) **Sequential Basics**: Sequential Datapaths and Control Clocked Synchronous Timing Methodology (4.3 up to 4.3.1,4.4 up to 4.4.1 of Text).	L1, L2, L3
Module -2	
Memories: Concepts, Memory Types, Error Detection and Correction (Chap 5 of Text).	L1, L2, L3
Module -3	
Implementation Fabrics: Integrated Circuits, Programmable Logic Devices, Packaging and Circuit boards, Interconnection and Signal integrity (Chap 6 of Text).	L1, L2, L3
Module -4	
I/O interfacing: I/O devices, I/O controllers, Parallel Buses, Serial Transmission, I/O software (Chap 8 of Text).	L1, L2, L3
Module -5	
Design Methodology: Design flow, Design optimization, Design for test, Nontechnical Issues (Chap 10 of Text).	L1, L2, L3, L4

Course outcomes: After studying this course, students will be able to:

- Construct the combinational circuits, using discrete gates and programmable logic devices.
- Describe Verilog model for sequential circuits and test pattern generation.

- Design a semiconductor memory for specific chip design.
- Design embedded systems using small microcontrollers, larger CPUs/DSPs, or hard or soft processor cores.
- Synthesize different types of processor and I/O controllers that are used in embedded system.

Question paper pattern:

- The question paper will have ten questions.
- Each full Question consisting of 16 marks. There will be 2 full questions (with a maximum of Three sub questions from each module.
- Each full question will have sub questions covering all the topics under a module.
- The students will have to answer 5 full questions, selecting one full question from each module.

Text Book:

Peter J. Ashenden, "Digital Design: An Embedded Systems Approach Using VERILOG", Elesvier, 2010.

B.E E&C SEVENTH SEMESTER SYLLABUS

MICROWAVES AND ANTENNAS

B.E., VII Semester, Electronics &Communication Engineering

[As per Choice Based Credit System (CBCS) scheme]

Course Code	**15EC71**	**IA Marks**	**20**
Number of Lecture Hours/Week	**04**	**Exam Marks**	**80**
Total Number of Lecture Hours	**50 (10 Hours / Module)**	**Exam Hours**	**03**

CREDITS – 04

Course objectives: This course will enable students to:

- Describe the microwave properties and its transmission media
- Describe microwave devices for several applications
- Understand the basics of antenna theory
- Select antennas for specific applications

Module-1

Microwave Tubes: Introduction, Reflex Klystron Oscillator, Mechanism of Oscillations, Modes of Oscillations, Mode Curve (Qualitative Analysis only). (Text 1: 9.1, 9.2.2)
Microwave Transmission Lines: Microwave Frequencies, Microwave devices, Microwave Systems, Transmission Line equations and solutions, Reflection Coefficient and Transmission Coefficient, Standing Wave and Standing Wave Ratio, Smith Chart, Single Stub matching. (Text 2: 0.1, 0.2, 0.3, 3.1, 3.2, 3.3, 3.5, 3.6 Except Double stub matching) **L1, L2**

Module-2

Microwave Network theory: Symmetrical Z and Y-Parameters for Reciprocal Networks, S matrix representation of Multi-Port Networks. (Text 1: 6.1, 6.2, 6.3)
Microwave Passive Devices: Coaxial Connectors and Adapters, Attenuators, Phase Shifters, Waveguide Tees, Magic tees. (Text 1: 6.4.2, 6.4.14, 6.4.15, 6.4.16) **L1, L2**

Module-3

Strip Lines: Introduction, Micro Strip lines, Parallel Strip lines, Coplanar Strip lines, Shielded Strip Lines. (Text 2: Chapter 11)
Antenna Basics: Introduction, Basic Antenna Parameters, Patterns, Beam Area, Radiation Intensity, Beam Efficiency, Directivity and Gain, Antenna Apertures, Effective Height, Bandwidth, Radio Communication Link, Antenna Field Zones & Polarization. (Text 3: 2.1- 2.11, 2.13,2.15) **L1, L2, L3**

Module-4

Point Sources and Arrays: Introduction, Point Sources, Power Patterns, Power Theorem, Radiation Intensity, Field Patterns, Phase Patterns, Arrays of Two Isotropic Point Sources, Pattern Multiplication, Linear Arrays of n Isotropic Point Sources of equal Amplitude and Spacing.(Text 3: 5.1 – 5.10,5.13)
Electric Dipoles: Introduction, Short Electric Dipole, Fields of a Short Dipole (General and Far Field Analyses), Radiation Resistance of a Short Dipole, Thin Linear Antenna (Field Analyses), Radiation Resistances of Lambda/2 Antenna. (Text 3: 6.1 -6.6)
L1, L2, L3, L4

Module-5

Loop and Horn Antenna: Introduction, Small loop, Comparison of Far fields of Small Loop and Short Dipole, The Loop Antenna General Case, Far field Patterns of Circular Loop Antenna with Uniform Current, Radiation Resistance of Loops, Directivity of Circular Loop Antennas with Uniform Current, Horn antennas Rectangular Horn Antennas.(Text 3: 7.1-7.8, 7.19, 7.20)
Antenna Types: Helical Antenna, Helical Geometry, Practical Design Considerations of Helical Antenna, Yagi-Uda array, Parabola General Properties, Log Periodic Antenna. (Text 3: 8.3, 8.5, 8.8, 9.5, 11.7) **L1, L2, L3**

Course Outcomes: At the end of the course, students will be able to:

- Describe the use and advantages of microwave transmission
- Analyze various parameters related to microwave transmission lines and waveguides
- Identify microwave devices for several applications
- Analyze various antenna parameters necessary for building an RF system
- Recommend various antenna configurations according to the applications

Text Books:

1. **Microwave Engineering** – Annapurna Das, Sisir K Das TMH Publication, 2nd, 2010.
2. **Microwave Devices and circuits**- Liao, Pearson Education.
3. **Antennas and Wave Propagation,** John D. Krauss, Ronald J Marhefka and Ahmad S Khan,4th Special Indian Edition , McGraw- Hill Education Pvt. Ltd., 2010.

Reference Books:

1. **Microwave Engineering** – David M Pozar, John Wiley India Pvt. Ltd. 3rdEdn, 2008.
2. **Microwave Engineering** – Sushrut Das, Oxford Higher Education, 2ndEdn, 2015.
3. **Antennas and Wave Propagation** – Harish and Sachidananda: Oxford University Press, 2007.

DIGITAL IMAGE PROCESSING

B.E., VII Semester, Electronics & Communication Engineering

[As per Choice Based Credit System (CBCS) scheme]

Subject Code	15EC72	IA Marks	20
Number of Lecture Hours/Week	04	Exam Marks	80
Total Number of Lecture Hours	50 (10 Hours / Module)	Exam Hours	03
CREDITS – 04			

Course Objectives: The objectives of this course are to:

- Understand the fundamentals of digital image processing
- Understand the image transform used in digital image processing
- Understand the image enhancement techniques used in digital image processing
- Understand the image restoration techniques and methods used in digital image processing
- Understand the Morphological Operations and Segmentation used in digital image processing

Module-1	**RBT Level**
Digital Image Fundamentals: What is Digital Image Processing?, Origins of Digital Image Processing, Examples of fields that use DIP, Fundamental Steps in Digital Image Processing, Components of an Image Processing System, Elements of Visual Perception, Image Sensing and Acquisition, Image Sampling and Quantization, Some Basic Relationships Between Pixels, Linear and Nonlinear Operations. [Text: Chapter 1 and Chapter 2: Sections 2.1 to 2.5, 2.6.2]	L1, L2
Module-2	
Spatial Domain: Some Basic Intensity Transformation Functions, Histogram Processing, Fundamentals of Spatial Filtering, Smoothing Spatial Filters, Sharpening Spatial Filters **Frequency Domain**: Preliminary Concepts, The Discrete Fourier Transform (DFT) of Two Variables, Properties of the 2-D DFT, Filtering in the Frequency Domain, Image Smoothing and Image Sharpening Using Frequency Domain Filters, Selective Filtering. [Text: Chapter 3: Sections 3.2 to 3.6 and Chapter 4: Sections 4.2, 4.5 to 4.10]	L1, L2, L3
Module-3	
Restoration: Noise models, Restoration in the Presence of Noise Only using Spatial Filtering and Frequency Domain Filtering, Linear, Position-Invariant Degradations, Estimating the Degradation Function, Inverse Filtering, Minimum Mean Square Error (Wiener) Filtering, Constrained Least Squares Filtering. [Text: Chapter 5: Sections 5.2, to 5.9]	L1, L2, L3
Module-4	

Color Image Processing: Color Fundamentals, Color Models, Pseudocolor Image Processing. **Wavelets:** Background, Multiresolution Expansions. **Morphological Image Processing:** Preliminaries, Erosion and Dilation, Opening and Closing, The Hit-or-Miss Transforms, Some Basic Morphological Algorithms. [Text: Chapter 6: Sections 6.1 to 6.3, Chapter 7: Sections 7.1 and 7.2, Chapter 9: Sections 9.1 to 9.5]	L1, L2, L3
Module-5	
Segmentation: Point, Line, and Edge Detection, Thresholding, Region-Based Segmentation, Segmentation Using Morphological Watersheds. **Representation and Description:** Representation, Boundary descriptors. [Text: Chapter 10: Sections 10.2, to 10.5 and Chapter 11: Sections 11.1 and 11.2]	L1, L2, L3

Course Outcomes: At the end of the course students should be able to:

- Understand image formation and the role human visual system plays in perception of gray and color image data.
- Apply image processing techniques in both the spatial and frequency (Fourier) domains.
- Design image analysis techniques in the form of image segmentation and to evaluate the Methodologies for segmentation.
- Conduct independent study and analysis of Image Enhancement techniques.

Question paper pattern:

- The question paper will have ten questions.
- Each full question consists of 16 marks.
- There will be 2 full questions (with a maximum of Three sub questions) from each module.
- Each full question will have sub questions covering all the topics under a module. The students will have to answer 5 full questions, selecting one full question from each module.

Text Book:

Digital Image Processing- Rafel C Gonzalez and Richard E. Woods, PHI 3rd Edition 2010.

Reference Books:

1. **Digital Image Processing**- S.Jayaraman, S.Esakkirajan, T.Veerakumar, Tata McGraw Hill 2014.
2. **Fundamentals of Digital Image Processing**-A. K. Jain, Pearson 2004.

POWER ELECTRONICS

B.E., VII Semester, Electronics & Communication Engineering

[As per Choice Based Credit System (CBCS) scheme]

POWER ELECTRONICS **B.E., VII Semester, Electronics & Communication Engineering** **[As per Choice Based Credit System (CBCS) Scheme]**			
Course Code	**15EC73**	**IA Marks**	**20**
Number of Lecture Hours/Week	**04**	**Exam Marks**	**80**
Total Number of Lecture Hours	**50 (10 Hours / Module)**	**Exam Hours**	**03**

CREDITS – 04

Course Objectives: This course will enable students to:

- Understand the construction and working of various power devices.
- Study and analysis of thyristor circuits with different triggering conditions.
- Learn the applications of power devices in controlled rectifiers, converters and inverters.
- Study of power electronics circuits under various load conditions.

Module-1

Introduction - Applications of Power Electronics, Power Semiconductor Devices, Control Characteristics of Power Devices, types of Power Electronic Circuits, Peripheral Effects.
Power Transistors: Power BJTs: Steady state characteristics. Power MOSFETs: device operation, switching characteristics, IGBTs: device operation, output and transfer characteristics, di/dt and dv/dt limitations. (Text 1) **L1, L2**

Module-2

Thyristors - Introduction, Principle of Operation of SCR, Static Anode-Cathode Characteristics of SCR, Two transisitor model of SCR, Gate Characteristics of SCR, Turn-ON Methods, Turn-OFF Mechanism, Turn-OFF Methods: Natural and Forced Commutation – Class A and Class B types, Gate Trigger Circuit: Resistance Firing Circuit, Resistance capacitance firing circuit, UJT Firing Circuit. (Text 2) **L1, L2, L3**

Module-3

Controlled Rectifiers - Introduction, Principle of Phase-Controlled Converter Operation, Single-Phase Full Converter with RL Load, Single-Phase Dual Converters, Single-Phase Semi Converter with RL load.
AC Voltage Controllers - Introduction, Principles of ON-OFF Control, Principle of Phase Control, Single phase controllers with resistive and inductive loads. (Text 1) **L1, L2, L3**

Module-4

DC-DC Converters - Introduction, principle of step-down operation and it's analysis with RL load, principle of step-up operation, Step-up converter with a resistive load, Performance parameters, Converter classification, Switching mode regulators: Buck regulator, Boost regulator, Buck-Boost Regulators, Chopper circuit design. (Text 1) **L1, L2**

Module-5

Pulse Width Modulated Inverters- Introduction, principle of operation, performance parameters, Single phase bridge inverters, voltage control of single phase inverters, current source inverters, Variable DC-link inverter, Boost inverter, Inverter circuit design.
Static Switches: Introduction, Single phase AC switches, DC Switches, Solid state

relays, Microelectronic relays. (Text 1) **L1, L2**

Course Outcomes: At the end of the course students should be able to:

- Describe the characteristics of different power devices and identify the various applications associated with it.
- Illustrate the working of power circuit as DC-DC converter.
- Illustrate the operation of inverter circuit and static switches.
- Determine the output response of a thyristor circuit with various triggering options.
- Determine the response of controlled rectifier with resistive and inductive loads.

Evaluation of Internal Assessment Marks:

It is suggested that at least 4 experiments of Power Electronics to be conducted by the students. This activity can be considered for the evaluation of 05 marks out of 20 Internal Assessment (IA) Marks, reserved for the other activities.

Text Books:

1. Mohammad H Rashid, Power Electronics, Circuits, Devices and Applications, 3rd/4th Edition, Pearson Education Inc, 2014, ISBN: 978-93-325-1844-5.
2. M.D Singh and K B Khanchandani, Power Electronics, 2nd Edition, Tata Mc-Graw Hill, 2009, ISBN: 0070583897

Reference Books:

1. L. Umanand, Power Electronics, Essentials and Applications, John Wiley India Pvt. Ltd, 2009.
2. Dr. P. S. Bimbhra, "Power Electronics", Khanna Publishers, Delhi, 2012.
3. P.C. Sen, "Modern Power Electronics", S Chand & Co New Delhi, 2005.
4. Earl Gose, Richard Johnsonbaugh, Steve Jost, Pattern Recognition and Image Analysis, ePub eBook.

MULTIMEDIA COMMUNICATION

B.E., VII Semester, Electronics & Communication Engineering/ Telecommunication Engineering

[As per Choice Based credit System (CBCS) Scheme

Subject Code	15EC741	IA Marks	20
Number of Lecture Hours/Week	03	Exam Marks	80
Total Number of Lecture Hours	40 (08 Hours / Module)	Exam Hours	03
CREDITS – 03			

Course objectives: This course will enable students to:

- Gain fundamental knowledge in understanding the basics of different multimedia networks and applications.
- Understand digitization principle techniques required to analyze different media types.
- Analyze compression techniques required to compress text and image and gain knowledge of DMS.
- Analyze compression techniques required to compress audio and video.
- Gain fundamental knowledge about multimedia communication across different networks.

Module-1	RBT Level
Multimedia Communications: Introduction, Multimedia information representation, multimedia networks, multimedia applications, Application and networking terminology. (Chap 1 of Text 1)	L1, L2
Module-2	
Information Representation: Introduction, Digitization principles, Text, Images, Audio and Video (Chap 2 of Text 1)	L1, L2
Module-3	
Text and image compression: Introduction, Compression principles, text compression, image Compression. (Chap 3 of Text 1) **Distributed multimedia systems:** Introduction, main Features of a DMS, Resource management of DMS, Networking, Multimedia operating systems (Chap. 4 - Sections 4.1 to 4.5 of Text 2).	L1, L2, L3
Module-4	
Audio and video compression: Introduction, Audio compression, video compression, video compression principles, video compression. (Chap. 4 of Text 1).	L1, L2, L3
Module-5	
Multimedia Communication Across Networks: Packet audio/video in the network environment, Video transport across generic networks, Multimedia Transport across ATM Networks (Chap. 6 - Sections 6.1, 6.2, 6.3 of Text 2).	L1, L2

Course Outcomes: After studying this course, students will be able to:

- Understand basics of different multimedia networks and applications.
- Understand different compression techniques to compress audio and video.
- Describe multimedia Communication across Networks.
- Analyse different media types to represent them in digital form.
- Compress different types of text and images using different compression techniques and analyse DMS.

Question paper pattern:

- The question paper will have ten questions.
- Each full question consists of 16 marks.
- There will be 2 full questions (with a maximum of Three sub questions) from each module.
- Each full question will have sub questions covering all the topics under a module.
- The students will have to answer 5 full questions, selecting one full question from each module.

Text Books:

1. Fred Halsall, "Multimedia Communications", Pearson education, 2001 ISBN - 9788131709948.

2. K. R. Rao, Zoran S. Bojkovic, Dragorad A. Milovanovic, "Multimedia Communication Systems", Pearson education, 2004. ISBN -9788120321458

Reference Book:

Raifsteinmetz, Klara Nahrstedt, “Multimedia: Computing, Communications and Applications”, Pearson education, 2002. ISBN -9788177584417

BIOMEDICAL SIGNAL PROCESSING

B.E., VII Semester, Electronics & Communication Engineering/ Telecommunication Engineering

[As per Choice Based Credit System (CBCS) scheme]

Subject Code	15EC742	IA Marks	20
Number of Lecture Hours/Week	03	Exam Marks	80
Total Number of Lecture Hours	40 (8 Hours / Module)	Exam Hours	03

CREDITS – 03

Course Objectives: The objectives of this course are to:

- Describe the origin, properties and suitable models of important biological signals such as ECG and EEG.
- Introduce students to basic signal processing techniques in analysing biological signals.
- Develop the students mathematical and computational skills relevant to the field of biomedical signal processing.
- Develop a thorough understanding on basics of ECG signal compression algorithms.
- Increase the student's awareness of the complexity of various biological phenomena and cultivate an understanding of the promises, challenges of the biomedical engineering.

Module-1	**RBT Level**
Introduction to Biomedical Signals: The nature of Biomedical Signals, Examples of Biomedical Signals, Objectives and difficulties in Biomedical analysis. **Electrocardiography:** Basic electrocardiography, ECG lead systems, ECG signal characteristics. **Signal Conversion** :Simple signal conversion systems, Conversion requirements for biomedical signals, Signal conversion circuits (Text-1)	L1, L2
Module-2	
Signal Averaging: Basics of signal averaging, signal averaging as a digital filter, a typical averager, software for signal averaging, limitations of signal averaging. **Adaptive Noise Cancelling:** Principal noise canceller model, 60-Hzadaptive cancelling using a sine wave model, other applications of adaptive filtering (Text-1)	L1, L2, L3
Module-3	
Data Compression Techniques: Turning point algorithm, AZTEC algorithm, Fan algorithm, Huffman coding, data reduction algorithms The Fourier transform, Correlation, Convolution, Power spectrum estimation, Frequency domain analysis of the ECG (Text-1)	L1, L2, L3
Module-4	

Cardiological signal processing: Basic Electrocardiography, ECG data acquisition, ECG lead system, ECG signal characteristics (parameters and their estimation), Analog filters, ECG amplifier, and QRS detector, Power spectrum of the ECG, Bandpass filtering techniques, Differentiation techniques, Template matching techniques, A QRS detection algorithm, Realtime ECG processing algorithm, ECG interpretation, ST segment analyzer, Portable arrhythmia monitor. (Text -2)	L1, L2, L3
Module-5	
Neurological signal processing: The brain and its potentials, The electrophysiological origin of brain waves, The EEG signal and its characteristics (EEG rhythms, waves, and transients), Correlation. **Analysis of EEG channels:** Detection of EEG rhythms, Template matching for EEG, spike and wave detection (Text-2).	L1, L2, L3

Course outcomes: At the end of the course, students will be able to:

- Possess the basic mathematical, scientific and computational skills necessary to analyse ECG and EEG signals.
- Apply classical and modern filtering and compression techniques for ECG and EEG signals
- Develop a thorough understanding on basics of ECG and EEG feature extraction.

Question paper pattern:

- The question paper will have ten questions.
- Each full question consists of 16 marks.
- There will be 2 full questions (with a maximum of Three sub questions) from each module.
- Each full question will have sub questions covering all the topics under a module. The students will have to answer 5 full questions, selecting one full question from each module.

Text Books:

1. **Biomedical Digital Signal Processing-** Willis J. Tompkins, PHI 2001.
2. **Biomedical Signal Processing Principles and Techniques-** D C Reddy, McGraw-Hill publications 2005

Reference Book:

Biomedical Signal Analysis-Rangaraj M. Rangayyan, John Wiley & Sons 2002

REAL TIME SYSTEMS

B.E., VII Semester, Electronics & Communication Engineering /Telecommunication Engineering

[As per Choice Based Credit System (CBCS) scheme]

Subject Code	15EC743	IA Marks	20
Number of Lecture Hours/Week	03	Exam marks	80
Total Number of Lecture Hours	40 (08 Hours per Module)	Exam Hours	03
Credits – 03			

Course Objectives: This Course will enable students to:

- Discuss the historical background of Real-time systems and its classifications.
- Describe the concepts of computer control and hardware components for Real-Time Application.
- Discuss the languages to develop software for Real-Time Applications.
- Explain the concepts of operating system and RTS development methodologies.

Modules	RBT Level
Module-1	
Introduction to Real-Time Systems: Historical background, Elements of a Computer Control System, RTS- Definition, Classification of Real-time Systems, Time Constraints, Classification of Programs. **Concepts of Computer Control:** Introduction, Sequence Control, Loop Control, Supervisory Control, Centralized Computer Control, Hierarchical Systems. (Text Book: 1.1 to 1.6 and 2.1 to 2.6)	**L1, L2**
Module-2	
Computer Hardware Requirements for Real-Time Applications: Introduction, General Purpose Computer, Single Chip Microcomputers and Microcontrollers, Specialized Processors, Process-Related Interfaces, Data Transfer Techniques, Communications, Standard Interface.(Text Book: 3.1 to 3.8)	**L1, L2**
Module-3	
Languages for Real-Time Applications: Introduction, Syntax Layout and Readability, Declaration and Initialization of Variables and Constants, Modularity and Variables, Compilation of Modular Programs, Data types, Control Structures, Exception Handling, Low-level facilities, Co-routines, Interrupts and Device Handling, Concurrency, Real-Time Support, Overview of Real-Time Languages. (Text Book: 5.1 to 5.14)	**L1, L2, L3**
Module-4	
Operating Systems: Introduction, Real-Time Multi-Tasking OS, Scheduling Strategies, Priority Structures, Task Management, Scheduler and Real-Time Clock Interrupt Handler, Memory Management, Code Sharing, Resource Control, Task Co-Operation and Communication, Mutual Exclusion.(Text Book: 6.1 to 6.11)	**L1, L2**

Module-5	
Design of RTS – General Introduction: Introduction, Specification Document, Preliminary Design, Single-Program Approach, Foreground/Background System. **RTS Development Methodologies:** Introduction, Yourdon Methodology, Ward and Mellor Method, Hately and Pirbhai Method. (Text Book: 7.1 to 7.5 and 8.1, 8.2, 8.4,8.5)	**L1, L2, L3**

Course Outcomes: At the end of the course, students should be able to:

- Understand the fundamentals of Real time systems and its classifications.
- Understand the concepts of computer control, operating system and the suitable computer hardware requirements for real-time applications.
- Develop the software languages to meet Real time applications.
- Apply suitable methodologies to design and develop Real-Time Systems.

Question Paper Pattern:

- The question paper will have ten questions.
- Each full Question consisting of 16 marks
- There will be 2 full questions (with a maximum of Three sub questions) from each module.
- Each full question will have sub questions covering all the topics under a module.
- The students will have to answer 5 full questions, selecting one full question from each module.

Text Book:

Real-Time Computer Control, by Stuart Bennet, 2nd Edn. Pearson Education. 2008.

Reference Books:

1. C.M. Krishna, Kang G. Shin, "Real –Time Systems", McGraw –Hill International Editions, 1997.
2. Real-Time Systems Design and Analysis, Phillip. A. Laplante, second edition, PHI, 2005.
3. Embedded Systems, Raj Kamal, Tata McGraw Hill, India, third edition, 2005.

Cryptography

B.E., VII Semester, Electronics & Communication Engineering

[As per Choice Based Credit System (CBCS) scheme]

Subject Code	15EC744	IA Marks	20
Number of Lecture Hours/Week	03	Exam Marks	80
Total Number of Lecture Hours	40 (08 Hours / Module)	Exam Hours	03
CREDITS – 03			

Course Objectives: This Course will enable students to:

- Enable students to understand the basics of symmetric key and public key cryptography.
- Equip students with some basic mathematical concepts and pseudorandom number generators required for cryptography.
- Enable students to authenticate and protect the encrypted data.
- Enrich knowledge about Email, IP and Web security.

Modules	
Module-1	**RBT Level**
Basic Concepts of Number Theory and Finite Fields: Divisibility and the divisibility algorithm, Euclidean algorithm, Modular arithmetic, Groups, Rings and Fields, Finite fields of the form GF(p), Polynomial arithmetic, Finite fields of the form GF(2^n)(Text 1: Chapter 3)	L1, L2
Module-2	
Classical Encryption Techniques: Symmetric cipher model, Substitution techniques, Transposition techniques, Steganography (Text 1: Chapter 1) **SYMMETRIC CIPHERS:** Traditional Block Cipher structure, Data Encryption Standard (DES) (Text 1: Chapter 2: Section1, 2)	L1, L2
Module-3	
SYMMETRIC CIPHERS: The AES Cipher. (Text 1: Chapter 4: Section 2, 3, 4) **Pseudo-Random-Sequence Generators and Stream Ciphers:** Linear Congruential Generators, Linear Feedback Shift Registers, Design and analysis of stream ciphers, Stream ciphers using LFSRs (Text 2: Chapter 16: Section 1, 2, 3, 4)	L1, L2, L3
Module-4	
More number theory: Prime Numbers, Fermat's and Euler's theorem, Primality testing, Chinese Remainder theorem, discrete logarithm. (Text 1: Chapter 7) **Principles of Public-Key Cryptosystems**: The RSA algorithm, Diffie - Hellman Key Exchange, Elliptic Curve Arithmetic, Elliptic Curve Cryptography (Text 1: Chapter 8, Chapter 9: Section 1, 3, 4)	L1, L2, L3
Module-5	

One-Way Hash Functions: Background, Snefru, N-Hash, MD4, MD5, Secure Hash Algorithm [SHA],One way hash functions using symmetric block algorithms, Using public key algorithms, Choosing a one-way hash functions, Message Authentication Codes. Digital Signature Algorithm, Discrete Logarithm Signature Scheme (Text 2: Chapter 18: Section 18.1 to 18.5, 18.7, 18.11 to 18.14 and Chapter 20: Section 20.1, 20.4)	L1, L2, L3

Course Outcomes: After studying this course, students will be able to:

- Use basic cryptographic algorithms to encrypt the data.
- Generate some pseudorandom numbers required for cryptographic applications.
- Provide authentication and protection for encrypted data.

Question paper pattern:

- The question paper will have 10 full questions carrying equal marks.
- Each full question consists of 16 marks with a maximum of Three sub questions.
- There will be 2 full questions from each module covering all the topics of the module
- The students will have to answer 5 full questions, selecting one full question from each module.

Text Books:

1. William Stallings , "Cryptography and Network Security Principles and Practice", Pearson Education Inc., 6th Edition, 2014, ISBN: 978-93-325-1877-3
2. Bruce Schneier, "Applied Cryptography Protocols, Algorithms, and Source code in C", Wiley Publications, 2nd Edition, ISBN: 9971-51-348-X

Reference Books:

1. Cryptography and Network Security, Behrouz A. Forouzan, TMH, 2007.
2. Cryptography and Network Security, Atul Kahate, TMH, 2003.

CAD for VLSI

B.E., VII Semester, Electronics & Communication Engineering

[As per Choice Based Credit System (CBCS) scheme]

Subject Code	15EC745	IA Marks	20
Number of Lecture Hours/Week	03	Exam marks	80
Total Number of Lecture Hours	40 (8 Hours per Module)	Exam Hours	03
CREDITS – 03			

Course Objectives: This course will enable students to:

- Understand various stages of Physical design of VLSI circuits
- Know about mapping a design problem to a realizable algorithm
- Become aware of graph theoretic, heuristic and genetic algorithms
- Compare performance of different algorithms

Modules	RBT Level
Module 1	
Data Structures and Basic Algorithms: Basic terminology, Complexity issues and NP-Hardness. Examples - Exponential, heuristic, approximation and special cases. Basic Algorithms. Graph Algorithms for Search, spanning tree, shortest path, min-cut and max-cut, Steiner tree. Computational Geometry Algorithms: Line sweep and extended line sweep methods.	L1, L2
Module 2	
Basic Data Structures. Atomic operations for layout editors, Linked list of blocks, Bin-based method, Neighbor pointers, corner-stitching, Multi-layer operations, Limitations of existing data structures. Layout specification languages. **Graph algorithms for physical design**: Classes of graphs in physical design, Relationship between graph classes, Graph problems in physical design, Algorithms for Interval graphs, permutation graphs and circle graphs.	L1, L2
Module 3	

Partitioning: Problem formulation, Design style specific partitioning problems, Classification of Partitioning Algorithms. Group migration algorithms: Kernighan-Lin algorithm, Fiduccia-Mattheyses Algorithm, Simulated Annealing, Simulated Evolution. **Floor Planning:** Problem formulation, Constraint based floor planning, Rectangular dualization, Simulated evolution algorithms.	L1, L2,L3
Module 4	
Pin Assignment: Problem formulation. Classification of pin assignment problems, General pin assignment problem. **Placement:** Problem formulation, Classification of placement algorithms. Simulation based placement: Simulated annealing, simulated evolution, force directed placement. Partitioning based algorithms: Breur's Algorithm, Terminal propagation algorithm, Other algorithms for placement.	L1,L2,L3
Module 5	
Global Routing: Problem formulation, Classification of Global routing algorithms, Maze routing algorithms: Lee's algorithm, Soukup's algorithm and Hadlock's Algorithm, Line probe algorithms. **Detailed Routing:** Problem formulation, Routing considerations, models, channel routing and switch box routing problems. General river routing problem, Single row routing problem. Two-layer channel routing algorithms: Basic Left Edge Algorithm, Dogleg router, Symbolic router-YACR2.	L1,L2,L3
Course Outcomes: After studying this course, students will be able to: • Appreciate the problems related to physical design of VLSI • Use genralized graph theoretic approach to VLSI problems • Design Simulated Annealing and Evolutionary algorithms • Know various approaches to write generalized algorithms	
Question paper pattern: • The question paper will have 10 full questions carrying equal marks. • Each full question consists of 16 marks with a maximum of Three sub questions. • There will be 2 full questions from each module covering all the topics of the module • The students will have to answer 5 full questions, selecting one full question from each module.	

Text Book:

Algorithms for VLSI Physical Design Automation, 3rd Ed, Naveed Sherwani, 1999 Kluwer Academic Publishers, Reprint 2009 Springer (India) Private Ltd. ISBN 978-81-8128-317-7.

DSP Algorithms and Architecture

B.E., VII Semester, Electronics & Communication Engineering /Telecommunication Engineering

[As per Choice Based Credit System (CBCS) scheme]

Subject Code	15EC751	IA Marks	20
Number of Lecture Hours/Week	03	Exam Marks	80
Total Number of Lecture Hours	40 (8 Hours / Module)	Exam Hours	03

CREDITS – 03

Course Objectives: This course will enable students to:

- Figure out the knowledge and concepts of digital signal processing techniques.
- Understand the computational building blocks of DSP processors and its speed issues.
- Understand the various addressing modes, peripherals, interrupts and pipelining structure of TMS320C54xx processor.
- Learn how to interface the external devices to TMS320C54xx processor in various modes.
- Understand basic DSP algorithms with their implementation.

Module-1	RBT Level
Introduction to Digital Signal Processing: Introduction, A Digital Signal – Processing System, The Sampling Process, Discrete Time Sequences, Discrete Fourier Transform (DFT) and Fast Fourier Transform (FFT), Linear Time-Invariant Systems, Digital Filters, Decimation and Interpolation. **Computational Accuracy in DSP Implementations:** Number Formats for Signals and Coefficients in DSP Systems, Dynamic Range and Precision, Sources of Error in DSP Implementation.	L1, L2
Module-2	
Architectures for Programmable Digital Signal – Processing Devices: Introduction, Basic Architectural Features, DSP Computational Building Blocks, Bus Architecture and Memory, Data Addressing Capabilities, Address Generation Unit, Programmability and Program Execution, Speed Issues, Features for External Interfacing.	L1, L2, L3
Module-3	
Programmable Digital Signal Processors: Introduction, Commercial Digital Signal-processing Devices, Data Addressing Modes of TMS32OC54XX, Memory Space of TMS32OC54xx Processors, Program Control. Detail Study of TMS320C54X & 54xx Instructions and Programming, On – Chip Peripherals, Interrupts of TMS32OC54XX Processors, Pipeline Operation of TMS32OC54xx Processor.	L1, L2, L3
Module-4	

Implementation of Basic DSP Algorithms: Introduction, The Q – notation, FIR Filters, IIR Filters, Interpolation and Decimation Filters (one example in each case). **Implementation of FFT Algorithms:** Introduction, An FFT Algorithm for DFT Computation, Overflow and Scaling, Bit – Reversed Index. Generation & Implementation on the TMS32OC54xx.	L1, L2, L3
Module-5	
Interfacing Memory and Parallel I/O Peripherals to Programmable DSP Devices: Introduction, Memory Space Organization, External Bus Interfacing Signals. Memory Interface, Parallel I/O Interface, Programmed I/O, Interrupts and I/O Direct Memory Access (DMA). **Interfacing and Applications of DSP Processors:** Introduction, Synchronous Serial Interface, A CODEC Interface Circuit, DSP Based Bio-telemetry Receiver, A Speech Processing System, An Image Processing System.	L1, L2, L3
Course Outcomes: At the end of this course, students would be able to • Comprehend the knowledge and concepts of digital signal processing techniques. • Apply the knowledge of DSP computational building blocks to achieve speed in DSP architecture or processor. • Apply knowledge of various types of addressing modes, interrupts, peripherals and pipelining structure of TMS320C54xx processor. • Develop basic DSP algorithms using DSP processors. • Discuss about synchronous serial interface and multichannel buffered serial port (McBSP) of DSP device. • Demonstrate the programming of CODEC interfacing.	
Question paper pattern: • The question paper will have 10 full questions carrying equal marks. • Each full question consists of 16 marks with a maximum of Three sub questions. • There will be 2 full questions from each module covering all the topics of the module • The students will have to answer 5 full questions, selecting one full question from each module.	
Text Book: "Digital Signal Processing", Avatar Singh and S. Srinivasan, Thomson Learning, 2004.	
Reference Books: 1. "Digital Signal Processing: A practical approach", Ifeachor E. C., Jervis B. W Pearson-Education, PHI, 2002. 2. "Digital Signal Processors", B Venkataramani and M Bhaskar, TMH, 2nd, 2010 3. "Architectures for Digital Signal Processing", Peter Pirsch John Weily, 2008	

IoT & WIRELESS SENSOR NETWORKS

B.E., VII Semester, Electronics & Communication Engineering /Telecommunication Engineering

[As per Choice Based Credit System (CBCS) scheme]

Subject Code	15EC752	IA Marks	20
Number of Lecture Hours/Week	03	Exam Marks	80
Total Number of Lecture Hours	40 (8 Hours / Module)	Exam Hours	03

CREDITS – 03

Course Objectives: This course will enable students to:

- Understand various sources of IoT & M2M communication protocols.
- Describe Cloud computing and design principles of IoT.
- Become aware of MQTT clients, MQTT server and its programming.
- Understand the architecture and design principles of WSNs.
- Enrich the knowledge about MAC and routing protocols in WSNs.

Module-1	**RBT Level**
Overview of Internet of Things: IoT Conceptual Framework, IoT Architectural View, Technology Behind IoT, Sources of IoT,M2M communication, Examples of IoT. Modified OSI Model for the IoT/M2M Systems, data enrichment, data consolidation and device management at IoT/M2M Gateway, web communication protocols used by connected IoT/M2M devices, Message communication protocols (CoAP-SMS, CoAP-MQ, MQTT,XMPP) for IoT/M2M devices.	L1, L2
Module-2	
Architecture and Design Principles for IoT: Internet connectivity, Internet-based communication,IPv4, IPv6,6LoWPAN protocol, IP Addressing in the IoT, Application layer protocols: HTTP, HTTPS,FTP,TELNET and ports. **Data Collection, Storage and Computing using a Cloud Platform:** Introduction, Cloud computing paradigm for data collection, storage and computing, Cloud service models, IoT Cloud- based data collection, storage and computing services using Nimbits.	L1, L2
Module-3	

Prototyping and Designing Software for IoT Applications: Introduction, Prototyping Embedded device software, Programming Embedded Device Arduino Platform using IDE, Reading data from sensors and devices, Devices, Gateways, Internet and Web/Cloud services software development. Programming MQTT clients and MQTT server. Introduction to IoT privacy and security. Vulnerabilities, security requirements and threat analysis, IoT Security Tomography and layered attacker model.	L1, L2, L3
Module-4	
Overview of Wireless Sensor Networks: Challenges for Wireless Sensor Networks, Enabling Technologies for Wireless Sensor Networks. **Architectures**: Single-Node Architecture - Hardware Components, Energy Consumption of Sensor Nodes, Operating Systems and Execution Environments, Network Architecture-Sensor Network Scenarios, Optimization Goals and Figures of Merit, Design principles for WSNs, Service interfaces of WSNs Gateway Concepts.	L1, L2, L3
Module-5	
Communication Protocols: Physical Layer and Transceiver Design Considerations, MAC Protocols for Wireless Sensor Networks, Low Duty Cycle Protocols And Wakeup Concepts - S-MAC , The Mediation Device Protocol, Wakeup Radio Concepts, Contention based protocols(CSMA,PAMAS), Schedule based protocols (LEACH, SMACS, TRAMA) Address and Name Management in WSNs, Assignment of MAC Addresses, Routing Protocols- Energy-Efficient Routing, Geographic Routing, Hierarchical networks by clustering.	L1, L2, L3
Course Outcomes: At the end of the course, students will be able to: • Describe the OSI Model for the IoT/M2M Systems. • Understand the architecture and design principles for IoT. • Learn the programming for IoT Applications. • Identify the communication protocols which best suits the WSNs.	
Question paper pattern: • The question paper will have ten questions. • Each full Question consisting of 16 marks. • There will be 2 full questions (with a maximum of Three sub questions) from each module. • Each full question will have sub questions covering all the topics under a module. • The students will have to answer 5 full questions, selecting one full question from each module.	

Text Books:

1. Raj Kamal, ”Internet of Things-Architecture and design principles”, McGraw Hill Education.
2. Holger Karl & Andreas Willig, "Protocols And Architectures for Wireless Sensor Networks" , John Wiley, 2005.
3. Feng Zhao & Leonidas J. Guibas, “Wireless Sensor Networks- An Information Processing Approach", Elsevier, 2007.

Reference Books:

1. Kazem Sohraby, Daniel Minoli, & Taieb Znati, “Wireless Sensor Networks- Technology, Protocols, And Applications”, John Wiley, 2007.
2. Anna Hac, “Wireless Sensor Network Designs”, John Wiley, 2003.

PATTERN RECOGNITION

B.E., VII Semester, Electronics & Communication Engineering/ Telecommunication Engineering

[As per Choice Based Credit System (CBCS) scheme]

Subject Code	15EC753	IA Marks	20
Number of Lecture Hours/Week	03	Exam Marks	80
Total Number of Lecture Hours	40 (8 Hours / Module)	Exam Hours	03
CREDITS – 03			

Course Objectives: The objectives of this course are to:

- Introduce mathematical tools needed for Pattern Recognition
- Impart knowledge about the fundamentals of Pattern Recognition.
- Provide knowledge of recognition, decision making and statistical learning problems
- Introduce parametric and non-parametric techniques, supervised learning and clustering concepts of pattern recognition

Modules

Module-1	**RBT Level**
Introduction: Importance of pattern recognition, Features, Feature Vectors, and Classifiers, Supervised, Unsupervised, and Semi-supervised learning, Introduction to Bayes Decision Theory, Discriminant Functions and Decision Surfaces, Gaussian PDF and Bayesian Classification for Normal Distributions.	L1, L2
Module-2	
Data Transformation and Dimensionality Reduction: Introduction, Basis Vectors, The Karhunen Loeve (KL) Transformation, Singular Value Decomposition, Independent Component Analysis (Introduction only). Nonlinear Dimensionality Reduction, Kernel PCA.	L1, L2
Module-3	
Estimation of Unknown Probability Density Functions: Maximum Likelihood Parameter Estimation, Maximum a Posteriori Probability estimation, Bayesian Interference, Maximum Entropy Estimation, Mixture Models, Naive-Bayes Classifier, The Nearest Neighbor Rule.	L1, L2, L3
Module-4	
Linear Classifiers: Introduction, Linear Discriminant Functions and Decision Hyperplanes, The Perceptron Algorithm, Mean Square Error Estimate, Stochastic Approximation of LMS Algorithm, Sum of Error Estimate.	L1, L2, L3
Module-5	
Nonlinear Classifiers: The XOR Problem, The two Layer Perceptron, Three Layer Perceptron, Back propagation Algorithm, Basic Concepts of Clustering, Introduction to Clustering , Proximity Measures.	L1, L2, L3

Course outcomes: At the end of the course, students will be able to:

- Identify areas where Pattern Recognition and Machine Learning can offer a solution.
- Describe the strength and limitations of some techniques used in computational Machine Learning for classification, regression and density estimation problems
- Describe genetic algorithms, validation methods and sampling techniques
- Describe and model data to solve problems in regression and classification
- Implement learning algorithms for supervised tasks

Question paper pattern:

The question paper will have ten questions.

- Each full question consists of 16 marks.
- There will be 2 full questions (with a maximum of Three sub questions) from each module.
- Each full question will have sub questions covering all the topics under a module. The students will have to answer 5 full questions, selecting one full question from each module.

Text Book:

Pattern Recognition: Sergios Theodoridis, Konstantinos Koutroumbas, Elsevier India Pvt. Ltd (Paper Back), 4th edition.

Reference Books:

1. **The Elements of Statistical Learning:** Trevor Hastie, Springer-Verlag New York, LLC (Paper Back), 2009.
2. **Pattern Classification:** Richard O. Duda, Peter E. Hart, David G. Stork. John Wiley & Sons, 2012.
3. **Pattern Recognition and Image Analysis Earl Gose:** Richard Johnsonbaugh, Steve Jost, ePub eBook.

ADVANCED COMPUTER ARCHITECTURE

B.E., VII Semester, Electronics & Communication Engineering /Telecommunication Engineering

[As per Choice Based Credit System (CBCS) scheme]

Subject Code	15EC754	IA Marks	20
Number of Lecture Hours/Week	03	Exam Marks	80
Total Number of Lecture Hours	40 (8 Hours / Module)	Exam Hours	03

CREDITS – 03

Course Objectives: This course will enable students to:

- Understand the various parallel computer models and conditions of parallelism
- Explain the control flow, dataflow and demand driven machines
- Study CISC, RISC, superscalar, VLIW and multiprocessor architectures
- Understand the concept of pipelining and memory hierarchy design
- Explain cache coherence protocols.

Module-1	RBT Level
Parallel Computer Models: The state of computing, Classification of parallel computers, Multiprocessors and multicomputer, Multivectors and SIMD computers. **Program and Network Properties:** Conditions of parallelism, Data and resource Dependences, Hardware and software parallelism, Program partitioning and scheduling, Grain Size and latency.	L1, L2
Module-2	
Program flow mechanisms: Control flow versus data flow, Data flow Architecture, Demand driven mechanisms, Comparisons of flow mechanisms. **Principles of Scalable Performance**: Performance Metrics and Measures, Parallel Processing Applications, Speedup Performance Laws, Scalability Analysis and Approaches.	L1, L2, L3
Module-3	
Speedup Performance Laws: Amdhal's law, Gustafson's law, Memory bounded speed up model, Scalability Analysis and Approaches. **Advanced Processors:** Advanced processor technology, Instruction-set Architectures, CISC Scalar Processors, RISC Scalar Processors, Superscalar Processors, VLIW Architectures.	L1, L2, L3
Module-4	
Pipelining: Linear pipeline processor, nonlinear pipeline processor, Instruction pipeline Design, Mechanisms for instruction pipelining, Dynamic instruction scheduling, Branch Handling techniques, branch prediction, Arithmetic Pipeline Design. **Memory Hierarchy Design:** Cache basics & cache performance, reducing miss rate and miss penalty, multilevel cache hierarchies, main memory organizations, design of memory hierarchies.	L1, L2, L3

Module-5	
Multiprocessor Architectures: Symmetric shared memory architectures, distributed shared memory architectures, models of memory consistency, cache coherence protocols (MSI, MESI, MOESI), scalable cache coherence, overview of directory based approaches, design challenges of directory protocols, memory based directory protocols, cache based directory protocols.	L1, L2, L3

Course Outcomes: At the end of the course, the students will be able to:

- Explain parallel computer models and conditions of parallelism
- Differentiate control flow, dataflow, demand driven mechanisms
- Explain the principle of scalable performance
- Discuss advanced processors architectures like CISC, RISC, superscalar and VLIW
- Understand the basics of instruction pipelining and memory technologies
- Explain the issues in multiprocessor architectures

Question paper pattern:

The question paper will have ten questions.

- Each full question consists of 16 marks.
- There will be 2 full questions (with a maximum of Three sub questions) from each module.
- Each full question will have sub questions covering all the topics under a module. The students will have to answer 5 full questions, selecting one full question from each module.

Text Book:

Kai Hwang, "Advanced computer architecture"; TMH.

Reference Books:

1. Kai Hwang and Zu, "Scalable Parallel Computers Architecture"; MGH.
2. M.J Flynn, "Computer Architecture, Pipelined and Parallel Processor Design"; Narosa Publishing.
3. D.A.Patterson, J.L.Hennessy, "Computer Architecture :A quantitative approach"; Morgan Kauffmann Feb, 2002.

SATELLITE COMMUNICATION

B.E., VII Semester, Electronics & Communication Engineering

[As per Choice Based Credit System (CBCS)]

Subject Code	15EC755	IA Marks	20
Number of Lecture Hours/Week	03	Exam Marks	80
Total Number of Lecture Hours	40 (8 Hours / Module)	Exam Hours	03

CREDITS – 03

Course Objectives: This course will enable students to

- Understand the basic principle of satellite orbits and trajectories.
- Study of electronic systems associated with a satellite and the earth station.
- Understand the various technologies associated with the satellite communication.
- Focus on a communication satellite and the national satellite system.
- Study of satellite applications focusing various domains services such as remote sensing, weather forecasting and navigation.

Module-1	**RBT Level**
Satellite Orbits and Trajectories: Definition, Basic Principles, Orbital parameters, Injection velocity and satellite trajectory, Types of Satellite orbits, Orbital perturbations, Satellite stabilization, Orbital effects on satellite's performance, Eclipses, Look angles: Azimuth angle, Elevation angle.	L1, L2
Module-2	
Satellite subsystem: Power supply subsystem, Attitude and Orbit control, Tracking, Telemetry and command subsystem, Payload. **Earth Station:** Types of earth station, Architecture, Design considerations, Testing, Earth station Hardware, Satellite tracking.	L1, L2
Module-3	
Multiple Access Techniques: Introduction, FDMA (No derivation), SCPC Systems, MCPC Systems, TDMA, CDMA, SDMA. **Satellite Link Design Fundamentals**: Transmission Equation, Satellite Link Parameters, Propagation considerations.	L1, L2, L3
Module-4	
Communication Satellites: Introduction, Related Applications, Frequency Bands, Payloads, Satellite Vs. Terrestrial Networks, Satellite Telephony, Satellite Television, Satellite radio, Regional satellite Systems, National Satellite Systems.	L1, L2
Module-5	

Remote Sensing Satellites: Classification of remote sensing systems, orbits, Payloads, Types of images: Image Classification, Interpretation, Applications. **Weather Forecasting Satellites**: Fundamentals, Images, Orbits, Payloads, Applications. **Navigation Satellites**: Development of Satellite Navigation Systems, GPS system, Applications.	L1, L2, L3

Course Outcomes: At the end of the course, the students will be able to:

- Describe the satellite orbits and its trajectories with the definitions of parameters associated with it.
- Describe the electronic hardware systems associated with the satellite subsystem and earth station.
- Describe the various applications of satellite with the focus on national satellite system.
- Compute the satellite link parameters under various propagation conditions with the illustration of multiple access techniques.

Question Paper pattern:

- The Question paper will have ten questions.
- Each full Question consisting of 16 marks
- There will be 2 full Questions (with a maximum of Three sub questions) from each module.
- Each full question will have sub questions covering all the topics under a module.
- The Students will have to answer 5 full Questions, selecting one full Question from each module.

Text Book:

Anil K. Maini, Varsha Agrawal, Satellite Communications, Wiley India Pvt. Ltd., 2015, ISBN: 978-81-265-2071-8.

Reference Books :

1. Dennis Roddy, Satellite Communications, 4th Edition, McGraw- Hill International edition, 2006
2. Timothy Pratt, Charles Bostian, Jeremy Allnutt, Satellite Communications, 2nd Edition, Wiley India Pvt. Ltd , 2017, ISBN: 978-81-265-0833-4

ADVANCED COMMUNICATION LAB

B.E., VII Semester, Electronics & Communication Engineering

[As per Choice Based Credit System (CBCS) scheme]

Subject Code	15ECL76	IA Marks	20
Number of Lecture Hours/Week	01Hr Tutorial (Instructions) + 02 Hours Laboratory = 03	Exam Marks	80
RBT Levels	L1, L2, L3	Exam Hours	03
CREDITS – 02			

Course objectives: This course will enable students to:

- Design and demonstrate the digital modulation techniques
- Demonstrate and measure the wave propagation in microstrip antennas
- Characteristics of microstrip devices and measurement of its parameters.
- Model an optical communication system and study its characteristics.
- Simulate the digital communication concepts and compute and display various parameters along with plots/figures.

Laboratory Experiments

PART-A: Following Experiments No. 1 to 4 has to be performed using discrete components.

1. Time Division Multiplexing and Demultiplexing of two bandlimited signals.
2. ASK generation and detection
3. FSK generation and detection
4. PSK generation and detection
5. Measurement of frequency, guide wavelength, power, VSWR and attenuation in microwave test bench.
6. Measurement of directivity and gain of microstrip dipole and Yagi antennas.
7. Determination of
    a. Coupling and isolation characteristics of microstrip directional coupler.
    b. Resonance characteristics of microstrip ring resonator and computation of dielectric constant of the substrate.
    c. Power division and isolation of microstrip power divider.
8. Measurement of propagation loss, bending loss and numerical aperture of an optical fiber.

PART-B: Simulation Experiments using SCILAB/MATLAB/Simulink or LabView

1. Simulate NRZ, RZ, half-sinusoid and raised cosine pulses and generate eye diagram for binary polar signaling.
2. Simulate the Pulse code modulation and demodulation system and display the waveforms.
3. Simulate the QPSK transmitter and receiver. Plot the signals and its constellation diagram.
4. Test the performance of a binary differential phase shift keying system by simulating the non-coherent detection of binary DPSK.

Course outcomes: On the completion of this laboratory course, the students will be able to:

- Determine the characteristics and response of microwave devices and optical waveguide.
- Determine the characteristics of microstrip antennas and devices and compute the parameters associated with it.
- Simulate the digital modulation schemes with the display of waveforms and computation of performance parameters.
- Design and test the digital modulation circuits/systems and display the waveforms.

Conduct of Practical Examination:

- All laboratory experiments are to be considered for practical examination.
- For examination one question from **PART-A** and one question from **PART-B or** only one question from **PART-B** experiments based on the complexity, to be set.
- Students are allowed to pick one experiment from the lot.
- Strictly follow the instructions as printed on the cover page of answer script for breakup of marks.
- Change of experiment is allowed only once and Marks allotted to the procedure part to be made zero.

VLSI LAB

B.E., VII Semester, Electronics & Communication Engineering

[As per Choice Based Credit System (CBCS) scheme]

Subject Code	15ECL77	IA Marks	20
Number of Lecture Hours/Week	01Hr Tutorial (Instructions) + 02 Hours Laboratory = 03	Exam Marks	80
RBT Levels	L1, L2, L3	Exam Hours	03

CREDITS – 02

Course objectives: This course will enable students to:

- Explore the CAD tool and understand the flow of the Full Custom IC design cycle.
- Learn DRC, LVS and Parasitic Extraction of the various designs.
- Design and simulate the various basic CMOS analog circuits and use them in higher circuits like data converters using design abstraction concepts.
- Design and simulate the various basic CMOS digital circuits and use them in higher circuits like adders and shift registers using design abstraction concepts.

Experiments can be conducted using any of the following or equivalent design tools: Cadence/Synopsis/Mentor Graphics/Microwind

Laboratory Experiments

PART - A

ASIC-DIGITAL DESIGN

1. Write Verilog Code for the following circuits and their Test Bench for verification, observe the waveform and synthesize the code with technological library with given constraints*. Do the initial timing verification with gate level simulation.
   i. An inverter
   ii. A Buffer
   iii. Transmission Gate
   iv. Basic/universal gates
   v. Flip flop -RS, D, JK, MS, T
   vi. Serial & Parallel adder
   vii. 4-bit counter [Synchronous and Asynchronous counter]
   viii. Successive approximation register [SAR]

PART - B
ANALOG DESIGN

1. Design an Inverter with given specifications**, completing the design flow mentioned below:
   a. Draw the schematic and verify the following
      i) DC Analysis
      ii) Transient Analysis
   b. Draw the Layout and verify the DRC, ERC
   c. Check for LVS
   d. Extract RC and back annotate the same and verify the Design
   e. Verify & Optimize for Time, Power and Area to the given constraint*

2. Design the (i) Common source and Common Drain amplifier and (ii) A Single Stage differential amplifier, with given specifications**, completing the design flow mentioned below:
   a. Draw the schematic and verify the following
      i) DC Analysis
      ii) AC Analysis
      iii) Transient Analysis
   b. Draw the Layout and verify the DRC, ERC
   c. Check for LVS
   d. Extract RC and back annotate the same and verify the Design.

3. Design an op-amp with given specification** using given differential amplifier Common source and Common Drain amplifier in library*** and completing the design flow mentioned below:
   a. Draw the schematic and verify the following
      i) DC Analysis
      ii). AC Analysis
      iii) Transient Analysis
   b. Draw the Layout and verify the DRC, ERC
   c. Check for LVS
   d. Extract RC and back annotate the same and verify the Design.

4. Design a 4 bit R-2R based DAC for the given specification and completing the design flow mentioned using given op-amp in the library***.
   a. Draw the schematic and verify the following
      i) DC Analysis
      ii) AC Analysis
      iii) Transient Analysis
   b. Draw the Layout and verify the DRC, ERC

5. For the SAR based ADC mentioned in the figure below draw the mixed signal schematic and verify the functionality by completing ASIC Design FLOW. [Specifications to GDS-II]

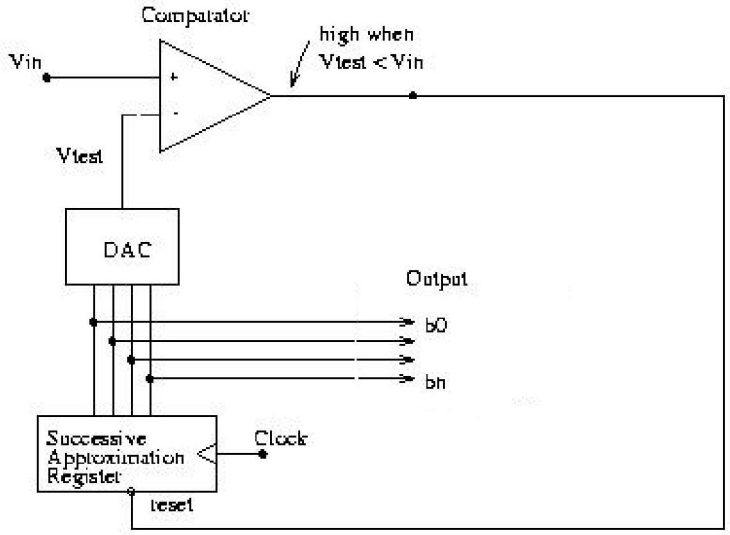

* An appropriate constraint should be given.

** Appropriate specification should be given.

*** Applicable Library should be added & information should be given to the Designer.

Course outcomes: On the completion of this laboratory course, the students will be able to:

- Write test bench to simulate various digital circuits.
- Interpret concepts of DC Analysis, AC Analysis and Transient Analysis in analog circuits.
- Design and simulate basic CMOS circuits like inverter, common source amplifier and differential amplifiers.
- Use basic amplifiers and further design higher level circuits like operational amplifier and analog/digital converters to meet desired parameters.
- Use transistors to design gates and further using gates realize shift registers and adders to meet desired parameters.

Conduct of Practical Examination:

- All laboratory experiments are to be included for practical examination.
- For examination, one question from **PART-A** and one question from **PART-B** to be set.
- Students are allowed to pick one experiment from the lot.
- Change of experiment is allowed only once and Marks allotted to the procedure part to be made zero.

B.E E&C EIGTH SEMESTER SYLLABUS

Wireless Cellular and LTE 4G Broadband

B.E., VIII Semester, Electronics &Communication Engineering/ Telecommunication Engineering

[As per Choice Based Credit System (CBCS) scheme]

Subject Code	15EC81	IA Marks	20
Number of Lecture	04	Exam Marks	80
Total Number	50 (10 Hours / Module)	Exam Hours	03

CREDITS – 04

Course Objectives: This course will enable students to:

- Understand the basics of LTE standardization phases and specifications.
- Explain the system architecture of LTE and E-UTRAN, the layer of LTE, based on the use of OFDMA and SC-FDMA principles.
- Analyze the role of LTE radio interface protocols to set up, reconfigure and release the Radio Bearer, for transferring the EPS bearer.
- Analyze the main factors affecting LTE performance including mobile speed and transmission bandwidth.

Module – 1	**RBT Level**
Key Enablers for LTE features: OFDM, Single carrier FDMA, Single carrier FDE, Channel Dependent Multiuser Resource Scheduling, Multi antenna Techniques, IP based Flat network Architecture, LTE Network Architecture. (Sec 1.4- 1.5 of Text). **Wireless Fundamentals:** Cellular concept, Broadband wireless channel (BWC), Fading in BWC, Modeling BWC – Empirical and Statistical models, Mitigation of Narrow band and Broadband Fading (Sec 2.2 – 2.7of Text).	L1, L2
Module – 2	
Multicarrier Modulation: OFDM basics, OFDM in LTE, Timing and Frequency Synchronization, PAR, SC-FDE (Sec 3.2 – 3.6 of Text). **OFDMA and SC-FDMA:**OFDM with FDMA,TDMA,CDMA, OFDMA, SC-FDMA, OFDMA and SC-FDMA in LTE (Sec 4.1 – 4.3, 4.5 of Text). **Multiple Antenna Transmission and Reception:** Spatial Diversity overview, Receive Diversity, Transmit Diversity, Interference cancellation and signal enhancement, Spatial Multiplexing, Choice between Diversity, Interference suppression and Spatial Multiplexing (Sec 5.1 – 5.6 of Text).	L1, L2
Module – 3	
Overview and Channel Structure of LTE: Introduction to LTE, Channel Structure of LTE, Downlink OFDMA Radio Resource, Uplink	L1, L2

SC-FDMA Radio Resource(Sec 6.1 – 6.4 of Text). . **Downlink Transport Channel Processing:** Overview, Downlink shared channels, Downlink Control Channels, Broadcast channels, Multicast channels, Downlink physical channels, H-ARQ on Downlink(Sec 7.1 – 7.7 of Text).	
Module – 4	
Uplink Channel Transport Processing: Overview, Uplink shared channels, Uplink Control Information, Uplink Reference signals, Random Access Channels, H-ARQ on uplink (Sec 8.1 – 8.6 of Text). **Physical Layer Procedures:** Hybrid – ARQ procedures, Channel Quality Indicator CQI feedback, Precoder for closed loop MIMO Operations, Uplink channel sounding, Buffer status Reporting in uplink, Scheduling and Resource Allocation, Cell Search, Random Access Procedures, Power Control in uplink(Sec 9.1- 9.6, 9.8, 9.9, 9.10 Text).	L1, L2
Module – 5	
Radio Resource Management and Mobility Management: PDCP overview, MAC/RLC overview, RRC overview, Mobility Management, Inter-cell Interference Coordination(Sec 10.1 – 10.5 of Text).	L1, L2

Course Outcomes: At the end of the course, students will be able to:

- Understand the system architecture and the functional standard specified in LTE 4G.
- Analyze the role of LTE radio interface protocols and EPS Data convergence protocols to set up, reconfigure and release data and voice from users.
- Demonstrate the UTRAN and EPS handling processes from set up to release including mobility management for a variety of data call scenarios.
- Test and Evaluate the Performance of resource management and packet data processing and transport algorithms.

Question Paper pattern:

- The Question paper will have ten questions.
- Each full Question consisting of 16 marks
- There will be 2 full Questions (with a maximum of Three sub questions) from each module.
- Each full question will have sub questions covering all the topics under a module.
- The Students will have to answer 5 full Questions, selecting one full Question from each module.

Text Book:

Arunabha Ghosh, Jan Zhang, Jefferey Andrews, Riaz Mohammed, 'Fundamentals of LTE', Prentice Hall, Communications Engg. and Emerging Technologies.

Reference Books:

1. LTE for UMTS Evolution to LTE-Advanced' Harri Holma and Antti Toskala, Second Edition - 2011, John Wiley & Sons, Ltd. Print ISBN: 9780470660003.
2. 'EVOLVED PACKET SYSTEM (EPS) ; THE LTE AND SAE EVOLUTION OF 3G UMTS' by Pierre Lescuyer and Thierry Lucidarme, 2008, John Wiley & Sons, Ltd. Print ISBN:978-0-470-05976-0.
3. 'LTE – The UMTS Long Term Evolution ; From Theory to Practice' by Stefania Sesia, Issam Toufik, and Matthew Baker, 2009 John Wiley & Sons Ltd, ISBN 978-0-470-69716-0.

FIBER OPTICS and NETWORKS

B.E., VIII Semester, Electronics &Communication Engineering

[As per Choice Based Credit System (CBCS)]

Subject Code	15EC82	IA Marks	20
Number of Lecture Hours/Week	4	Exam Marks	80
Total Number of Lecture Hours	50(10 Hours / Module)	Exam Hours	03
CREDITS – 04			

Course Objectives: This course will enable students to:

- Learn the basic principle of optical fiber communication with different modes of light propagation.
- Understand the transmission characteristics and losses in optical fiber.
- Study of optical components and its applications in optical communication networks.
- Learn the network standards in optical fiber and understand the network architectures along with its functionalities.

Module -1	**RBT Level**
Optical fiber Communications: Historical development, The general system, Advantages of optical fiber communication, Optical fiber waveguides: Ray theory transmission, Modes in planar guide, Phase and group velocity, Cylindrical fiber: Modes, Step index fibers, Graded index fibers, Single mode fibers, Cutoff wavelength, Mode field diameter, effective refractive index. Fiber Materials, Photonic crystal fibers. (Text 2)	L1, L2
Module -2	
Transmission characteristics of optical fiber: Attenuation, Material absorption losses, Linear scattering losses, Nonlinear scattering losses, Fiber bend loss, Dispersion, Chromatic dispersion, Intermodal dispersion: Multimode step index fiber. **Optical Fiber Connectors:** Fiber alignment and joint loss, Fiber splices, Fiber connectors, Fiber couplers. (Text 2)	L1, L2
Module -3	
Optical sources: Energy Bands, Direct and Indirect Bandgaps, Light Emitting diodes: LED Structures, Light Source Materials, Quantum Efficiency and LED Power, Modulation. Laser Diodes: Modes and Threshold conditions, Rate equation, External Quantum Efficiency, Resonant frequencies, Laser Diode structures and Radiation Patterns: Single mode lasers. **Photodetectors:** Physical principles of Photodiodes, Photodetector noise, Detector response time. **Optical Receiver:** Optical Receiver Operation: Error sources,	L1, L2

Front End Amplifiers, Receiver sensitivity, Quantum Limit. (Text 1)	
Module -4	
WDM Concepts and Components: Overview of WDM: Operational Principles of WDM, WDM standards, Mach-Zehnder Interferometer Multiplexers, Isolators and Circulators, Fiber grating filters, Dielectric Thin-Film Filters, Diffraction Gratings, Active Optical Components, Tunable light sources, **Optical amplifiers:** Basic application and Types, Semiconductor optical amplifiers, Erbium Doped Fiber Amplifiers, Raman Amplifiers, Wideband Optical Amplifiers. (Text 1)	L1, L2
Module -5	
Optical Networks: Optical network evolution and concepts: Optical networking terminology, Optical network node and switching elements, Wavelength division multiplexed networks, Public telecommunication network overview. Optical network transmission modes, layers and protocols: Synchronous networks, Asynchronous transfer mode, OSI reference model, Optical transport network, Internet protocol, Wavelength routing networks: Routing and wavelength assignment, Optical switching networks: Optical circuit switched networks, packet switched networks, Multiprotocol Label Switching, Optical burst switching networks, Optical network deployment: Long-haul networks, Metropoliton area networks, Access networks, Local area networks. (Text 2)	L1, L2

Course Outcomes: At the end of the course, students will be able to:

1. Classification and working of optical fiber with different modes of signal propagation.
2. Describe the transmission characteristics and losses in optical fiber communication.
3. Describe the construction and working principle of optical connectors, multiplexers and amplifiers.
4. Describe the constructional features and the characteristics of optical sources and detectors.
5. Illustrate the networking aspects of optical fiber and describe various standards associated with it.

Question Paper pattern:

- The Question paper will have ten questions.
- Each full Question consisting of 16 marks
- There will be 2 full Questions (with a maximum of Three sub questions) from each module.
- Each full question will have sub questions covering all the topics under a module.
- The Students will have to answer 5 full Questions, selecting one full Question from each module.

Text Books:

1. Gerd Keiser , Optical Fiber Communication, 5th Edition, McGraw Hill

Education(India) Private Limited, 2015. ISBN:1-25-900687-5.
2. John M Senior, Optical Fiber Communications, Principles and Practice, 3rd Edition, Pearson Education, 2010, ISBN:978-81-317-3266-3

Reference Book:

Joseph C Palais, Fiber Optic Communication , Pearson Education, 2005, ISBN:0130085103

Micro Electro Mechanical Systems

B.E., VIII Semester, Electronics &Communication Engineering/ Telecommunication Engineering

[As per Choice Based Credit System (CBCS) scheme]

Subject Code	15EC831	IA Marks	20
Number of Lecture Hours/Week	03	Exam marks	80
Total Number of Lecture Hours	40 (8 Hours per Module)	Exam Hours	03
CREDITS – 03			

Course Objectives: This course will enable students to:

- Understand overview of microsystems, their fabrication and application areas.
- Working principles of several MEMS devices.
- Develop mathematical and analytical models of MEMS devices.
- Know methods to fabricate MEMS devices.
- Various application areas where MEMS devices can be used.

Module 1	**RBT Level**
Overview of MEMS and Microsystems: MEMS and Microsystem, Typical MEMS and Microsystems Products, Evolution of Microfabrication, Microsystems and Microelectronics, Multidisciplinary Nature of Microsystems, Miniaturization. Applications and Markets.	L1, L2
Module 2	
Working Principles of Microsystems: Introduction, Microsensors, Microactuation, MEMS with Microactuators, Microaccelerometers, Microfluidics. **Engineering Science for Microsystems Design and Fabrication**: Introduction, Molecular Theory of Matter and Inter-molecular Forces, Plasma Physics, Electrochemistry.	L1, L2
Module 3	
Engineering Mechanics for Microsystems Design: Introduction, Static Bending of Thin Plates, Mechanical Vibration, Thermomechanics, Fracture Mechanics, Thin Film Mechanics, Overview on Finite Element Stress Analysis.	L1,L2,L3
Module 4	

Scaling Laws in Miniaturization: Introduction, Scaling in Geometry, Scaling in Rigid-Body Dynamics, Scaling in Electrostatic Forces, Scaling in Fluid Mechanics, Scaling in Heat Transfer.	L1,L2,L3
Module 5	
Overview of Micromanufacturing: Introduction, Bulk Micromanufacturing, Surface Micromachining, The LIGA Process, Summary on Micromanufacturing.	L1,L2

Course Outcomes: After studying this course, students will be able to:

- Appreciate the technologies related to Micro Electro Mechanical Systems.
- Understand design and fabrication processes involved with MEMS devices.
- Analyse the MEMS devices and develop suitable mathematical models
- Know various application areas for MEMS device

Question paper pattern:

- The question paper will have 10 full questions carrying equal marks.
- Each full question consists of 16 marks with a maximum of Three sub questions.
- There will be 2 full questions from each module covering all the topics of the module
- The students will have to answer 5 full questions, selecting one full question from each module.

Text Book:

Tai-Ran Hsu, MEMS and Micro systems: Design, Manufacture and Nanoscale Engineering, 2nd Ed, Wiley.

Reference Books:

1. Hans H. Gatzen, Volker Saile, JurgLeuthold, Micro and Nano Fabrication: Tools and Processes, Springer, 2015.
2. Dilip Kumar Bhattacharya, Brajesh Kumar Kaushik, Microelectromechanical Systems (MEMS), Cenage Learning.

SPEECH PROCESSING

B.E., VIII Semester, Electronics & Communication Engineering/ Telecommunication Engineering

[As per Choice Based Credit System (CBCS) scheme]

Subject Code	15EC832	IA Marks	20
Number of Lecture Hours/Week	03	Exam Marks	80
Total Number of Lecture Hours	40 (8 Hours / Module)	Exam Hours	03
CREDITS – 03			

Course Objectives: This course enables students to:

- Introduce the models for speech production
- Develop time and frequency domain techniques for estimating speech parameters
- Introduce a predictive technique for speech compression
- Provide fundamental knowledge required to understand and analyse speech recognition, synthesis and speaker identification systems.

Modules	
Module-1	**RBT Level**
Fundamentals of Human Speech Production: The Process of Speech Production, Short-Time Fourier Representation of Speech, The Acoustic Theory of Speech Production, Lossless Tube Models of the Vocal Tract, Digital Models for Sampled Speech Signals	L1, L2
Module-2	
Time-Domain Methods for Speech Processing: Introduction to Short-Time Analysis of Speech, Short-Time Energy and Short-Time Magnitude, Short-Time Zero-Crossing Rate, The Short-Time Autocorrelation Function, The Modified Short-Time Autocorrelation Function, The Short-Time Average Magnitude Difference Function.	L1, L2
Module-3	
Frequency Domain Representations: Discrete-Time Fourier Analysis, Short-Time Fourier Analysis, Spectrographic Displays, Overlap Addition(OLA),Method of Synthesis, Filter Bank Summation(FBS) Method of Synthesis, Time-Decimated Filter Banks, Two-Channel Filter Banks, Implementation of the FBS Method Using the FFT, OLA Revisited, Modifications of the STFT.	L1, L2
Module-4	
The Cepstrum and Homomorphic Speech Processing: Homomorphic Systems for Convolution, Homomorphic Analysis of the Speech Model, Computing the Short-Time Cepstrum and Complex Cepstrum of Speech, Homomorphic Filtering of Natural Speech, Cepstrum Analysis of All-Pole Models, Cepstrum Distance Measures.	L1, L2, L3
Module-5	
Linear Predictive Analysis of Speech Signals: Basic Principles of Linear	L1, L2,

Predictive Analysis, Computation of the Gain for the Model, Frequency Domain Interpretations of Linear Predictive Analysis, Solution of the LPC Equations, The Prediction Error Signal, Some Properties of the LPC Polynomial A(z), Relation of Linear Predictive Analysis to Lossless Tube Models, Alternative Representations of the LP Parameters.	L3

Course outcomes: Upon completion of the course, students will be able to:

- Model speech production system and describe the fundamentals of speech.
- Extract and compare different speech parameters.
- Choose an appropriate speech model for a given application.
- Analyse speech recognition, synthesis and speaker identification systems

Question paper pattern:

- The question paper will have ten questions.
- Each full question consists of 16 marks.
- There will be 2 full questions (with a maximum of Three sub questions) from each module.
- Each full question will have sub questions covering all the topics under a module. The students will have to answer 5 full questions, selecting one full question from each module.

Text Book:

Theory and Applications of Digital Speech Processing-Rabiner and Schafer, Pearson Education 2011

Reference Books:

3. **Fundamentals of Speech Recognition-** Lawrence Rabiner and Biing-Hwang Juang, Pearson Education, 2003.

4. **Speech and Language Processing–An Introduction to Natural Language Processing, Computational Linguistics, and Speech Recognition-** Daniel Jurafsky and James H Martin, Pearson Prentice Hall 2009.

Radar Engineering

B.E., VIII Semester, Electronics & Communication Engineering/ Telecommunication Engineering

[As per Choice Based Credit System (CBCS) scheme]

Subject Code	15EC833	IA Marks	20
Number of Lecture Hours/Week	03	Exam Marks	80
Total Number of Lecture Hours	40 (8 Hours / Module)	Exam Hours	03

CREDITS – 03

Course objectives: This course will enable students to:

- Understand the Radar fundamentals and analyze the radar signals.
- Understand various technologies involved in the design of radar transmitters and receivers.
- Learn various radars like MTI, Doppler and tracking radars and their comparison

Modules	**RBT Level**
Module-1	
Basics of Radar: Introduction, Maximum Unambiguous Range, Radar Waveforms, Definitions with respect to pulse waveform - PRF, PRI, Duty Cycle, Peak Transmitter Power, Average transmitter Power. **Simple form of the Radar Equation**, Radar Block Diagram and Operation, Radar Frequencies, Applications of Radar, The Origins of Radar, Illustrative Problems. **(Chapter 1 of Text)**	L1, L2, L3
Module-2	
The Radar Equation: Prediction of Range Performance, Detection of signal in Noise, Minimum Detectable Signal, Receiver Noise, SNR, Modified Radar Range Equation, Envelope Detector — False Alarm Time and Probability, Probability of Detection, **Radar Cross Section of Targets:** simple targets – sphere, cone-sphere, Transmitter Power, PRF and Range Ambiguities, System Losses (qualitative treatment), Illustrative Problems. **(Chapter 2 of Text, Except 2.4, 2.6, 2.8 & 2.11)**	L1, L2, L3
Module-3	
MTI and Pulse Doppler Radar: Introduction, Principle, Doppler Frequency Shift, Simple CW Radar, Sweep to Sweep subtraction and Delay Line Canceler, MTI Radar with – Power Amplifier Transmitter, Delay Line Cancelers — Frequency Response of Single Delay- Line Canceler, Blind Speeds, Clutter Attenuation, MTI Improvement Factor, N- Pulse Delay-Line Canceler, **Digital MTI Processing** – Blind phases, I and Q Channels, Digital MTI Doppler signal processor, Moving Target Detector- Original MTD. **(Chapter 3: 3.1, 3.2, 3.5, 3.6 of Text)**	L1, L2, L3
Module-4	
Tracking Radar: Tracking with Radar- Types of Tracking Radar Systems, Monopulse Tracking- Amplitude Comparison Monopulse (one-and two-coordinates), Phase Comparison Monopulse. **Sequential Lobing**, Conical Scan Tracking, Block Diagram of Conical Scan	L1, L2, L3

Tracking Radar, Tracking in Range, Comparison of Trackers. **(Chapter 4: 4.1, 4.2, 4.3 of Text)**	
Module-5	
The Radar Antenna: Functions of The Radar Antenna, Antenna Parameters, Reflector Antennas and Electronically Steered Phased array Antennas. **(Chapter 9: 9.1, 9.2 9.4, 9.5 of Text)** **Radar Receiver:** The Radar Receiver, Receiver Noise Figure, Super Heterodyne Receiver, Duplexers and Receivers Protectors, Radar Displays. **(Chapter 11 of Text)**	L1, L2, L3

Course outcomes: At the end of the course, students will be able to:

- Understand the radar fundamentals and radar signals.
- Explain the working principle of pulse Doppler radars, their applications and limitations
- Describe the working of various radar transmitters and receivers.
- Analyze the range parameters of pulse radar system which affect the system performance

Question paper pattern:

- The question paper will have ten questions.
- Each full Question consisting of 16 marks
- There will be 2 full questions (with a maximum of Three sub questions) from each module.
- Each full question will have sub questions covering all the topics under a module.
- The students will have to answer 5 full questions, selecting one full question from each module.

Text Book:

Introduction to Radar Systems- Merrill I Skolink, 3e, TMH, 2001.

Reference Books:

1. Radar Principles, Technology, Applications — Byron Edde, Pearson Education, 2004.
2. Radar Principles – Peebles. Jr, P.Z. Wiley. New York, 1998.
3. Principles of Modem Radar: Basic Principles – Mark A. Rkhards, James A. Scheer, William A. HoIm. Yesdee, 2013

MACHINE LEARNING

B.E., VIII Semester, Electronics & Communication Engineering/ Telecommunication Engineering

[As per Choice Based Credit System (CBCS) scheme]

Subject Code	15EC834	IA Marks	20
Number of Lecture Hours/Week	03	Exam Marks	80
Total Number of Lecture Hours	40 (8 Hours / Module)	Exam Hours	03

CREDITS – 03

Course Objectives: This course will enable students to:

- Introduce some concepts and techniques that are core to Machine Learning.
- Understand learning and decision trees.
- Acquire knowledge of neural networks, Bayesian techniques and instant based learning.
- Understand analytical learning and reinforced learning.

Modules	
Module-1	**RBT Level**
Learning: Designing Learning systems, Perspectives and Issues, Concept Learning, Version Spaces and Candidate Elimination Algorithm, Inductive bias.	L1, L2
Module-2	
Decision Tree and ANN: Decision Tree Representation, Hypothesis Space Search, Inductive bias in decision tree, issues in Decision tree. Neural Network Representation, Perceptrons, Multilayer Networks and Back Propagation Algorithms.	L1, L2
Module-3	
Bayesian and Computational Learning: Bayes Theorem, Bayes Theorem Concept Learning, Maximum Likelihood, Minimum Description Length Principle, Bayes Optimal Classifier, Gibbs Algorithm, Naïve Bayes Classifier.	L1, L2
Module-4	
Instant Based Learning and Learning set of rules: K- Nearest Neighbour Learning, Locally Weighted Regression, Radial Basis Functions, Case-Based Reasoning. Sequential Covering Algorithms, Learning Rule Sets, Learning First Order Rules, Learning Sets of First Order Rules.	L1, L2
Module-5	
Analytical Learning and Reinforced Learning: Perfect Domain Theories, Explanation Based Learning, Inductive-Analytical Approaches, FOCL Algorithm, Reinforcement Learning.	L1, L2

Course outcomes: At the end of the course, students should be able to:

- Understand the core concepts of Machine learning.
- Appreciate the underlying mathematical relationships within and across Machine Learning algorithms.
- Explain paradigms of supervised and un-supervised learning.
- Recognize a real world problem and apply the learned techniques of Machine Learning to solve the problem.

Question paper pattern:

- The question paper will have ten questions.
- Each full question consists of 16 marks.
- There will be 2 full questions (with a maximum of Three sub questions) from each module.
- Each full question will have sub questions covering all the topics under a module. The students will have to answer 5 full questions, selecting one full question from each module.

Text Book:

Machine Learning-Tom M. Mitchell, McGraw-Hill Education, (INDIAN EDITION), 2013.

Reference Books:

1. **Introduction to Machine Learning-** Ethem Alpaydin, 2nd Ed., PHI Learning Pvt. Ltd., 2013.
2. **The Elements of Statistical Learning-**T. Hastie, R. Tibshirani, J. H. Friedman, Springer; 1st edition, 2001.

NETWORK AND CYBER SECURITY

B.E., VIII Semester, Electronics & Communication Engineering

[As per Choice Based credit System (CBCS) Scheme

Subject Code	15EC835	IA Marks	20
Number of Lecture Hours/Week	03	Exam marks	80
Total Number of Lecture Hours	40 (8 Hours per Module)	Exam Hours	03

CREDITS – 03

Course Objectives: This course will enable students to:

- Know about security concerns in Email and Internet Protocol.
- Understand cyber security concepts.
- List the problems that can arise in cyber security.
- Discuss the various cyber security frame work.

Module-1	**RBT Level**
Transport Level Security: Web Security Considerations, Secure Sockets Layer, Transport Layer Security, HTTPS, Secure Shell (SSH) (Text 1: Chapter 15)	L1, L2
Module-2	
E-mail Security: Pretty Good Privacy, S/MIME, Domain keys identified mail (Text 1: Chapter 17)	L1, L2
Module-3	
IP Security: IP Security Overview, IP Security Policy, Encapsulation Security Payload (ESP), Combining security Associations Internet Key Exchange. Cryptographic Suites(Text 1: Chapter 18)	L1, L2
Module-4	
Cyber network security concepts: Security Architecture, antipattern: signature based malware detection versus polymorphic threads, document driven certification and accreditation, policy driven security certifications. Refactored solution: reputational, behavioural and entropy based malware detection. **The problems:** cyber antipatterns concept, forces in cyber antipatterns, cyber anti pattern templates, cyber security antipattern catalog (Text-2: Chapter1 & 2)	L1, L2, L3
Module-5	
Cyber network security concepts contd. : **Enterprise security using Zachman framework** Zachman framework for enterprise architecture, primitive models versus composite models, architectural problem solving patterns, enterprise workshop, matrix mining, mini patterns for problem solving meetings. **Case study:** cyber security hands on – managing administrations	L1, L2, L3

and root accounts, installing hardware, reimaging OS, installing system protection/ antimalware, configuring firewalls (Text-2: Chapter 3 & 4).	

Course Outcomes: After studying this course, students will be able to:

- Explain network security protocols
- Understand the basic concepts of cyber security
- Discuss the cyber security problems
- Explain Enterprise Security Framework
- Apply concept of cyber security framework in computer system administration

Question paper pattern:

- The question paper will have 10 full questions carrying equal marks.
- Each full question consists of 16 marks with a maximum of Three sub questions.
- There will be 2 full questions from each module covering all the topics of the module
- The students will have to answer 5 full questions, selecting one full question from each module.

Text Books:

1. William Stallings, "Cryptography and Network Security Principles and Practice", Pearson Education Inc., 6th Edition, 2014, ISBN: 978-93-325-1877-3.

2. Thomas J. Mowbray, "Cyber Security – Managing Systems, Conducting Testing, and Investigating Intrusions", Wiley.

Reference Books:

1. Cryptography and Network Security, Behrouz A. Forouzan, TMH, 2007.
2. Cryptography and Network Security, Atul Kahate, TMH, 2003.

VISVESVARAYA TECHNOLOGICAL UNIVERSTY, BELAGAVI

B.E (CBCS) Open Electives List offered by EC/TC Board

5th Semester Open Electives List:

SL No	Course Code	Course Title	Teaching Department(s)	Offering Department
1	15EC561	Automotive Electronics	EC/TC	EC/TC
2	15EC562	Object Oriented Programming Using C++	CS/IS/EC/TC/EE	EC/TC
3	15EC563	8051 Microcontroller	EC/TC	EC/TC

6th Semester Open Electives List:

SL No	Course Code	Course Title	Teaching Department(s)	Offering Department
1	15EC661	Data Structures Using C++	CS/IS/EC/TC	EC/TC
2	15EC662	Power Electronics	EC/TC/EE	EC/TC
3	15EC663	Digital System Design using Verilog	EC/TC	EC/TC

5th Semester Open Electives Syllabus for the Courses offered by EC/TC Board

Automotive Electronics
B.E V Semester (Open Elective)
[As per Choice Based Credit System (CBCS) scheme

Subject Code	15EC561	IA Marks	20
Number of Lecture Hours/Week	03	Exam Marks	80
Total Number of Lecture Hours	40(08 Hrs per Module)	Exam Hours	03

CREDITS – 03

Course objectives: This course will enable students to:

- Understand the basics of automobile dynamics and design electronics to complement those features.
- Design and implement the electronics that attribute the reliability, safety, and smartness to the automobiles, providing add-on comforts.

Module-1	**RBT Level**
Automotive Fundamentals Overview – Evolution of Automotive Electronics, Automobile Physical Configuration, Survey of Major Automotive Systems, The Engine – Engine Block, Cylinder Head, Four Stroke Cycle, Engine Control, Ignition System - Spark plug, High voltage circuit and distribution, Spark pulse generation, Ignition Timing, Diesel Engine, Drive Train - Transmission, Drive Shaft, Differential, Suspension, Brakes, Steering System (Text 1: Chapter1), Starter Battery –Operating principle: (Text 2: Pg. 407-410) (4 hours) **The Basics of Electronic Engine Control –** Motivation for Electronic Engine Control – Exhaust Emissions, Fuel Economy,Conceptof an Electronic Engine control system, Definition of General terms, Definition of Engine performance terms, Engine mapping, Effect of Air/Fuel ratio, spark timing and EGR on performance, Control Strategy, Electronic Fuel control system, Analysis of intake manifold pressure, Electronic Ignition. (Text 1: Chapter 5) (4 hours)	L1, L2
Module-2	

Automotive Control System applications of Sensors and Actuators – Typical Electronic Engine Control System, Variables to be measured (Text 1: Chapter 6) (1 hour) **Automotive Sensors** – Airflow rate sensor, Strain Gauge MAP sensor, Engine Crankshaft Angular Position Sensor, Magnetic Reluctance Position Sensor, Hall effect Position Sensor, Shielded Field Sensor, Optical Crankshaft Position Sensor, Throttle Angle Sensor (TAS), Engine Coolant Temperature (ECT) Sensor, Exhaust Gas Oxygen (O2/EGO) Lambda Sensors, Piezoelectric Knock Sensor. (Text 1: Chapter 6) (5 hours) **Automotive Actuators –** Solenoid,Fuel Injector, EGR Actuator, Ignition System (Text 1: Chapter 6) (2 hours)	L1, L2
Module-3	
Digital Engine Control Systems – Digital Engine control features, Control modes for fuel Control (Seven Modes), EGR Control, Electronic Ignition Control - Closed loop Ignition timing, Spark Advance Correction Scheme, Integrated Engine Control System - Secondary Air Management, Evaporative Emissions Canister Purge, Automatic System Adjustment, System Diagnostics. (Text 1: Chapter 7) (6 hours) **Control Units –** Operating conditions, Design, Data processing, Programming, Digital modules in the Control unit, Control unit software. (Text 2: Pg. 196-207) (2 hours)	L1, L2
Module-4	
Automotive Networking –Bus Systems – Classification, Applications in the vehicle, Coupling of networks, Examples of networked vehicles (Text 2: Pg. 85-91), Buses - CAN Bus, LIN Bus, MOST Bus, Bluetooth, FlexRay, Diagnostic Interfaces. (Text 2: Pg. 92-151) (6 hours) **Vehicle Motion Control** – Typical Cruise Control System, Digital Cruise Control System, Digital Speed Sensor, Throttle Actuator, Digital Cruise Control configuration, Cruise Control Electronics (Digital only), Antilock Brake System (ABS) (Text 1: Chapter 8) (2 hours)	L1, L2
Module-5	
Automotive Diagnostics–Timing Light, Engine Analyzer, On-board diagnostics, Off-board diagnostics, Expert Systems, Occupant Protection Systems – Accelerometer based Air Bag systems. (Text 1: Chapter 10) (2 hours)	L1, L2, L3

Future Automotive Electronic Systems – Alternative Fuel Engines, Electric and Hybrid vehicles, Fuel cell powered cars, Collision Avoidance Radar warning Systems, Low tire pressure warning system, Heads Up display, Speech Synthesis, Navigation – Navigation Sensors - Radio Navigation, Signpost navigation, dead reckoning navigation, Voice Recognition Cell Phone dialing, Advanced Cruise Control, Stability Augmentation, Automatic driving Control (Text 1: Chapter 11) (6 hours)	

Course Outcomes: At the end of the course, students will be able to:

- Acquire an overview of automotive components, subsystems, and basics of Electronic Engine Control in today's automotive industry.
- Use available automotive sensors and actuators while interfacing with microcontrollers / microprocessors during automotive system design.
- Understand the networking of various modules in automotive systems, communication protocols and diagnostics of the sub systems.
- Design and implement the electronics that attribute the reliability, safety, and smartness to the automobiles, providing add-on comforts and get fair idea on future Automotive Electronic Systems.

Question paper pattern:

- The question paper will have ten questions.
- Each full Question consisting of 16 marks
- There will be 2 full questions (with a maximum of three sub questions) from each module.
- Each full question will have sub questions covering all the topics under a module.
- The students will have to answer 5 full questions, selecting one full question from each module.

Text Books:

1. William B. Ribbens, "Understanding Automotive Electronics", 6th Edition, Elsevier Publishing.

2. Robert Bosch Gmbh (Ed.) Bosch Automotive Electrics and Automotive Electronics Systems and Components, Networking and Hybrid Drive, 5th edition, John Wiley& Sons Inc., 2007.

Object Oriented Programming Using C++

B.E. V Semester (Open Elective)

[As per Choice Based Credit System (CBCS)scheme]

Subject Code	15EC562	IA Marks	20
Number of Lecture Hours/Week	03	Exam Marks	80
Total Number of Lecture Hours	40 (08 Hrs/ Module	Exam Hours	03
CREDITS – 03			

Course objectives: This course will enable students to:

- Define Encapsulation, Inheritance and Polymorphism.
- Solve the problem with object oriented approach.
- Analyze the problem statement and build object oriented system model.
- Describe the characters and behavior of the objects that comprise a system.
- Explain function overloading, operator overloading and virtual functions.
- Discuss the advantages of object oriented programming over procedure oriented programming.

Module -1	**RBT Level**
Beginning with C++ and its features: What is C++?, Applications and structure of C++ program, Different Data types, Variables, Different Operators, expressions, operator overloading and control structures in C++ (Topics from Ch -2,3 of Text).	L1, L2
Module -2	
Functions, classes and Objects: Functions, Inline function, function overloading, friend and virtual functions, Specifying a class, C++ program with a class, arrays within a class, memory allocation to objects, array of objects, members, pointers to members and member functions (Selected Topics from Chap-4,5 of Text).	L1, L2, L3
Module -3	
Constructors, Destructors and Operator overloading: Constructors, Multiple constructors in a class, Copy constructor, Dynamic constructor, Destructors, Defining operator overloading, Overloading Unary and binary operators, Manipulation of strings using operators (Selected topics from Chap-6, 7 of Text).	L1, L2, L3
Module -4	
Inheritance, Pointers, Virtual Functions, Polymorphism: Derived Classes, Single, multilevel, multiple inheritance,	L1, L2, L3

Pointers to objects and derived classes, this pointer, Virtual and pure virtual functions (Selected topics from Chap-8,9 of Text).	
Module -5	
Streams and Working with files: C++ streams and stream classes, formatted and unformatted I/O operations, Output with manipulators, Classes for file stream operations, opening and closing a file, EOF (Selected topics from Chap-10, 11 of Text).	L1, L2, L3

Course Outcomes: At the end of the course, students will be able to:

- Explain the basics of Object Oriented Programming concepts.
- Apply the object initialization and destroy concept using constructors and destructors.
- Apply the concept of polymorphism to implement compile time polymorphism in programs by using overloading methods and operators.
- Use the concept of inheritance to reduce the length of code and evaluate the usefulness.
- Apply the concept of run time polymorphism by using virtual functions, overriding functions and abstract class in programs.
- Use I/O operations and file streams in programs.

Question paper pattern:

- The question paper will have ten questions.
- Each full Question consisting of 16 marks
- There will be 2 full questions (with a maximum of Three sub questions) from each module.
- Each full question will have sub questions covering all the topics under a module.
- The students will have to answer 5 full questions, selecting one full question from each module.

Text Book:

ObjectOriented Programming with C++, E.Balaguruswamy, TMH, 6th Edition, 2013.

Reference Book:

Object Oriented Programming using C++, Robert Lafore, Galgotia publication 2010.

8051 MICROCONTROLLER

B.E., V Semester (Open Elective)

[As per Choice Based Credit System (CBCS) scheme]

Subject Code	15EC563	IA Marks	20
Number of Lecture Hours/Week	03	Exam Marks	80
Total Number of Lecture Hours	40 (08 Hrs/ Module)	Exam Hours	03
CREDITS – 03			

Course objectives: This course will enable students to:

- Understand the difference between a Microprocessor and a Microcontroller and embedded microcontrollers.
- Familiarize the basic architecture of 8051 microcontroller.
- Program 8051microprocessor using AssemblyLevel Language and C.
- Understand the interrupt system of 8051 and the use of interrupts.
- Understand the operation and use of inbuilt Timers/Counters and Serial port of 8051.
- Interface 8051 to external memory and I/O devices using its I/O ports.

Module -1	RBT Level
8051 Microcontroller: Microprocessor Vs Microcontroller, Embedded Systems, Embedded Microcontrollers, 8051 Architecture- Registers, Pin diagram, I/O ports functions, Internal Memory organization. External Memory (ROM & RAM) interfacing.	L1, L2
Module -2	
8051 Instruction Set: Addressing Modes, Data Transfer instructions, Arithmetic instructions, Logical instructions, Branch instructions, Bit manipulation instructions. Simple Assembly language program examples (without loops) to use these instructions.	L1, L2
Module -3	
8051 Stack, I/O Port Interfacing and Programming: 8051 Stack, Stack and Subroutine instructions. Assembly language program examples on subroutine and involving loops - Delay subroutine, Factorial of an 8 bit number (result maximum 8 bit), Block move without overlap, Addition of N 8 bit numbers, Picking smallest/largest of N 8 bit numbers. Interfacing simple switch and LED to I/O ports to switch on/off LED with respect to switch status.	L1, L2, L3
Module -4	
8051 Timers and Serial Port: 8051 Timers and Counters – Operation and Assembly language programming to generate a	L1, L2, L3

pulse using Mode-1 and a square wave using Mode-2 on a port pin. 8051 Serial Communication- Basics of Serial Data Communication, RS-232 standard, 9 pin RS232 signals, Simple Serial Port programming in Assembly and C to transmit a message and to receive data serially.	
Module -5	
8051 Interrupts and Interfacing Applications: 8051 Interrupts. 8051 Assembly language programming to generate an external interrupt using a switch, 8051 C programming to generate a square waveform on a port pin using a Timer interrupt. Interfacing 8051 to ADC-0804, LCD and Stepper motor and their 8051 Assembly language interfacing programming.	L1, L2, L3

Evaluation of Internal Assessment Marks:

It is suggested that at least a few simple programs to be executed by students using a simulation software or an 8051 microcontroller kit for better understanding of the course. This activity can be considered for the evaluation of 5 marks out of 20 Internal assessment marks, reserved for the other activities.

Course outcomes: At the end of the course, students will be able to:

- Explain the difference between Microprocessors & Microcontrollers, Architecture of 8051 Microcontroller, Interfacing of 8051 to external memory and Instruction set of 8051.
- Write 8051 Assembly level programs using 8051 instruction set.
- Explain the Interrupt system, operation of Timers/Counters and Serial port of 8051.
- Write 8051 Assembly language program to generate timings and waveforms using 8051 timers, to send & receive serial data using 8051 serial port and to generate an external interrupt using a switch.
- Write 8051 C programs to generate square wave on 8051 I/O port pin using interrupt and to send & receive serial data using 8051 serial port.
- Interface simple switches, simple LEDs, ADC 0804, LCD and Stepper Motor to 8051 using 8051 I/O ports.

Question paper pattern:

- The question paper will have ten questions.
- Each full Question consisting of 16 marks
- There will be 2 full questions (with a maximum of Three sub questions) from each module.
- Each full question will have sub questions covering all the topics under a module.
- The students will have to answer 5 full questions, selecting one full question from each module.

TEXT BOOKS:

1. **"The 8051 Microcontroller and Embedded Systems – using assembly and C",** Muhammad Ali Mazidi and Janice Gillespie Mazidi and Rollin D. McKinlay; PHI, 2006 / Pearson, 2006.

2. **"The 8051 Microcontroller",** Kenneth J. Ayala, 3rd Edition, Thomson/Cengage Learning.

REFERENCE BOOKS:

1. **"The 8051 Microcontroller Based Embedded Systems",** Manish K Patel, McGraw Hill, 2014, ISBN: 978-93-329-0125-4.
2. **"Microcontrollers: Architecture, Programming, Interfacing and System Design",** Raj Kamal, Pearson Education, 2005.

6th Semester Open Electives Syllabus for the courses offered by EC/TC Board:

DATA STRUCTURE USING C++
B.E VI Semester (Open Elective)
[As per Choice Based Credit System (CBCS) Scheme]

Course Code	**15EC661**	**IA Marks**	**20**
Number of Lecture Hours/Week	**03**	**Exam Marks**	**80**
Total Number of Lecture Hours	**40 (08 Hrs per Module)**	**Exam Hours**	**03**

CREDITS – 03

Course objectives: This course will enable students to

- Explain fundamentals of data structures and their applications essential for programming/problem solving
- Analyze Linear Data Structures: Stack, Queues, Lists
- Analyze Non Linear Data Structures: Trees
- Assess appropriate data structure during program development/Problem Solving

Module -1

INTRODUCTION: Functions and parameters, Dynamic memory allocation, Recursion.
LINEAR LISTS: Data objects and structures, Linear list data structures, Array Representation, Vector Representation, Singly Linked lists and chains. **L1, L2**

Module -2

ARRAYS AND MATRICS: Arrays, Matrices, Special matrices, Sparse matrices.

STACKS: The abstract data types, Array Representation, Linked Representation, Applications-Parenthesis Matching & Towers of Hanoi. **L1, L2, L3**

Module -3

QUEUES: The abstract data types, Array Representation, Linked Representation, Applications-Railroad car arrangement.

HASHING: Dictionaries, Linear representation, Hash table representation. **L1, L2, L3**

Module -4

BINARY AND OTHER TREES: Trees, Binary trees, Properties and representation of binary trees, Common binary tree operations, Binary tree traversal the ADT binary tree, ADT binary tree and the class linked binary tree. **L1, L2, L3**

Module -5

Priority Queues: Linear lists, Heaps, Applications-Heap Sorting.
Search Trees: Binary search trees operations and implementation, Binary Search trees with duplicates. **L1, L2, L3**

Course outcomes: After studying this course, students will be able to:

- Acquire knowledge of Dynamic memory allocation, Various types of data structures, operations and algorithms and Sparse matrices and Hashing
- Understand non Linear data structures trees and their applications
- Design appropriate data structures for solving computing problems
- Analyze the operations of Linear Data structures: Stack, Queue and Linked List and their applications

Text Book:

Data structures, Algorithms, and applications in C++, Sartaj Sahni, Universities Press, 2nd Edition, 2005.

Reference Books:

1. **Data structures, Algorithms, and applications in C++,** Sartaj Sahni, Mc. Graw Hill, 2000.
2. **Object Oriented Programming with C++,** E.Balaguruswamy**,** TMH, 6th Edition, 2013.
3. **Programming in C++,** E.Balaguruswamy. TMH, 4th, 2010.

POWER ELECTRONICS

B.E., VI Semester (Open Elective)

[As per Choice Based Credit System (CBCS) scheme]

Subject Code	15EC662	IA Marks	20
Number of Lecture Hours/Week	03	Exam Marks	80
Total Number of Lecture Hours	40 (08 Hours / Module)	Exam Hours	03
CREDITS – 03			

Course Objectives: This course will enable students to

- Understand the working of various power devices.
- Study and analysis of thyristor circuits with different triggering techniques.
- Learn the applications of power devices in controlled rectifiers, converters and inverters.
- Study of power electronics circuits under different load conditions.

Module-1	**RBT Level**
Introduction - Applications of Power Electronics, Power Semiconductor Devices, Control Characteristics of Power Devices, types of Power Electronic Circuits. Power Transistors: Power BJTs: Steady state characteristics. Power MOSFETs: device operation, switching characteristics, IGBTs: device operation, output and transfer characteristics. (Text 1)	L1, L2
Module-2	
Thyristors - Introduction, Principle of Operation of SCR, Static Anode-Cathode Characteristics of SCR, Two transistor model of SCR, Gate Characteristics of SCR, Turn-ON Methods, Turn-OFF Mechanism, Turn-OFF Methods: Natural and Forced Commutation – Class A and Class B types, Gate Trigger Circuit: Resistance Firing Circuit, Resistance capacitance firing circuit. (Text 2)	L1, L2, L3
Module-3	
Controlled Rectifiers - Introduction, principle of phase controlled converter operation, Single phase full converters, Single phase dual converters. AC Voltage Controllers - Introduction, Principles of ON-OFF Control, Principle of Phase Control, Single phase control with resistive and inductive loads. (Text 1)	L1, L2, L3
Module-4	
DC-DC Converters - Introduction, principle of step-down operation and it's analysis with RL load, principle of step-up operation, Step-up converter with a resistive load, Performance parameters, Converter classification, Switching mode regulators: Buck regulator, Boost regulator, Buck-Boost Regulators. (Text 1)	L1, L2
Module-5	
Pulse Width Modulated Inverters- Introduction, principle of operation, performance parameters, Single phase bridge inverters, voltage control of single phase inverters, current source inverters, Variable DC-link inverter, Boost inverter. (Text 1)	L1, L2

Course outcomes: After studying this course, students will be able to:

- Describe the characteristics of different power devices and identify the applications.
- Illustrate the working of DC-DC converter and inverter circuit.
- Determine the output response of a thyristor circuit with various triggering options.
- Determine the response of controlled rectifier with resistive and inductive loads.

Evaluation of Internal Assessment Marks:

It is suggested that at least a few experiments of Power Electronics are conducted by the students for better understanding of the course. This activity can be considered for the evaluation of 5 marks out of 20 Internal assessment marks, reserved for the other activities.

Question paper pattern:

- The question paper will have ten questions
- Each full question consists of 16 marks**.**
- There will be 2 full questions (with a maximum of Three sub questions) from each module.
- Each full question will have sub questions covering all the topics under a module
- The students will have to answer 5 full questions, selecting one full question from each module

Text Book:

1. Mohammad H Rashid, Power Electronics, Circuits, Devices and Applications, 3rd/4thEdition, Pearson Education Inc, 2014, ISBN: 978-93-325-1844-5.
2. M.D Singh and K B Khanchandani, Power Electronics, 2nd Edition, Tata Mc-Graw Hill, 2009, ISBN: 0070583897.

Reference Books:

1. L. Umanand, Power Electronics, Essentials and Applications, John Wiley India Pvt. Ltd, 2009.
2. Dr. P. S. Bimbhra, “Power Electronics”, Khanna Publishers, Delhi, 2012.
3. P.C. Sen, “Modern Power Electronics”, S Chand & Co New Delhi, 2005.

DIGITAL SYSTEM DESIGN USING VERILOG

B.E., VI Semester (Open Elective)

[As per Choice Based Credit System (CBCS) scheme]

Subject Code:	15EC663	IA Marks: 20
Number of Lecture Hours/Week:	03	Exam Marks: 80
Total Number of Lecture Hours:	40 (08 Hrs per module)	Exam Hours: 03
CREDITS – 03		

Course objectives: Thiscourse will enable students to:

- Understand the concepts of Verilog Language.
- Design the digital systems as an activity in a larger systems design context.
- Study the design and operation of semiconductor memories frequently used in application specific digital system.
- Inspect how effectively IC's are embedded in package and assembled in PCB's for different application.
- Design and diagnosis of processors and I/O controllers used in embedded systems.

Module -1	RBT Level
Introduction and Methodology: Digital Systems and Embedded Systems, Real-World Circuits, Models, Design Methodology (1.1, 1.3 to 1.5 of Text). **Combinational Basics:**Combinational Components and Circuits, Verification of Combinational Circuits.(2.3 and 2.4 of Text) **Sequential Basics**:Sequential Datapaths and ControlClocked Synchronous Timing Methodology (4.3 up to 4.3.1,4.4 up to 4.4.1 of Text).	L1, L2, L3
Module -2	
Memories: Concepts, Memory Types, Error Detection and Correction (Chap 5 of Text).	L1, L2, L3
Module -3	
Implementation Fabrics: Integrated Circuits, Programmable Logic Devices, Packaging and Circuit boards, Interconnection and Signal integrity (Chap 6 of Text).	L1, L2, L3
Module -4	
I/O interfacing: I/O devices, I/O controllers, Parallel Buses, Serial Transmission, I/O software (Chap 8 of Text).	L1, L2, L3
Module -5	
Design Methodology: Design flow, Design optimization, Design for test, Nontechnical Issues (Chap 10 of Text).	L1, L2, L3, L4

Course outcomes: After studying this course, students will be able to:

- Construct the combinational circuits, using discrete gates and programmable logic devices.
- Describe Verilog model for sequential circuits and test pattern generation.
- Design a semiconductor memory for specific chip design.

- Design embedded systems using small microcontrollers, larger CPUs/DSPs, or hard or soft processor cores.
- Synthesize different types of processor and I/O controllers that are used in embedded system.

Question paper pattern:

- The question paper will have ten questions.
- Each full Question consisting of 16 marks. There will be 2 full questions (with a maximum of Three sub questions from each module.
- Each full question will have sub questions covering all the topics under a module.
- The students will have to answer 5 full questions, selecting one full question from each module.

Text Book:

Peter J. Ashenden, "Digital Design: An Embedded Systems Approach Using VERILOG", Elesvier, 2010.